INDEX FOR J30-06 STANDARDS:

J30-01-06	INDEX SHEET	
J30-01A-06	GENERAL NOTES	
J30-02B-06	SUPERSTRUCTURE DETAILS	70'-0 BRIDGE - NON-EPOXY COATED REINFORCING
J30-02E-06	SUPERSTRUCTURE DETAILS	70'-0 BRIDGE - EPOXY COATED REINFORCING
J30-03B-06	SUPERSTRUCTURE DETAILS	70'-0 BRIDGE - NON-EPOXY COATED REINFORCING
J30-03E-06	SUPERSTRUCTURE DETAILS	70'-0 BRIDGE - EPOXY COATED REINFORCING
J30-04B-06	SUPERSTRUCTURE DETAILS	80'-0 BRIDGE - NON-EPOXY COATED REINFORCING
J30-04E-06	SUPERSTRUCTURE DETAILS	80'-0 BRIDGE - EPOXY COATED REINFORCING
J30-05B-06	SUPERSTRUCTURE DETAILS	80'-0 BRIDGE - NON-EPOXY COATED REINFORCING
J30-05E-06	SUPERSTRUCTURE DETAILS	80'-0 BRIDGE - EPOXY COATED REINFORCING
J30-06B-06	SUPERSTRUCTURE DETAILS	90'-0 BRIDGE - NON-EPOXY COATED REINFORCING
J30-06E-06	SUPERSTRUCTURE DETAILS	90'-0 BRIDGE - EPOXY COATED REINFORCING
J30-07B-06	SUPERSTRUCTURE DETAILS	90'-0 BRIDGE - NON-EPOXY COATED REINFORCING
J30-07E-06	SUPERSTRUCTURE DETAILS	90'-0 BRIDGE - EPOXY COATED REINFORCING
J30-08B-06	SUPERSTRUCTURE DETAILS	100'-0 BRIDGE - NON-EPOXY COATED REINFORCING
J30-08E-06	SUPERSTRUCTURE DETAILS	100'-0 BRIDGE - EPOXY COATED REINFORCING
J30-09B-06	SUPERSTRUCTURE DETAILS	100'-0 BRIDGE - NON-EPOXY COATED REINFORCING
J30-09E-06	SUPERSTRUCTURE DETAILS	100'-0 BRIDGE - EPOXY COATED REINFORCING
J30-10B-06	SUPERSTRUCTURE DETAILS	110'-0 BRIDGE - NON-EPOXY COATED REINFORCING
J30-10E-06	SUPERSTRUCTURE DETAILS	110'-0 BRIDGE - EPOXY COATED REINFORCING
J30-11B-06	SUPERSTRUCTURE DETAILS	110'-0 BRIDGE - NON-EPOXY COATED REINFORCING
J30-11E-06	SUPERSTRUCTURE DETAILS	110'-0 BRIDGE - EPOXY COATED REINFORCING
J30-12B-06	SUPERSTRUCTURE DETAILS	120'-0 BRIDGE - NON-EPOXY COATED REINFORCING
J30-12E-06	SUPERSTRUCTURE DETAILS	120'-0 BRIDGE - EPOXY COATED REINFORCING
J30-13B-06	SUPERSTRUCTURE DETAILS	120'-0 BRIDGE - NON-EPOXY COATED REINFORCING
J30-13E-06	SUPERSTRUCTURE DETAILS	120'-0 BRIDGE - EPOXY COATED REINFORCING
J30-14B-06	SUPERSTRUCTURE DETAILS	130'-0 BRIDGE - NON-EPOXY COATED REINFORCING
J30-14E-06	SUPERSTRUCTURE DETAILS	130'-0 BRIDGE - EPOXY COATED REINFORCING
J30-15B-06	SUPERSTRUCTURE DETAILS	130'-0 BRIDGE - NON-EPOXY COATED REINFORCING
J30-15E-06	SUPERSTRUCTURE DETAILS	130'-0 BRIDGE - EPOXY COATED REINFORCING
J30-16B-06	SUPERSTRUCTURE DETAILS	140'-0 BRIDGE - NON-EPOXY COATED REINFORCING
J30-16E-06	SUPERSTRUCTURE DETAILS	140'-0 BRIDGE - EPOXY COATED REINFORCING
J30-17B-06	SUPERSTRUCTURE DETAILS	140'-0 BRIDGE - NON-EPOXY COATED REINFORCING
J30-17E-06	SUPERSTRUCTURE DETAILS	140'-0 BRIDGE - EPOXY COATED REINFORCING
J30-18B-06	SUPERSTRUCTURE DETAILS	150'-0 BRIDGE - NON-EPOXY COATED REINFORCING
J30-18E-06	SUPERSTRUCTURE DETAILS	150'-0 BRIDGE - EPOXY COATED REINFORCING
J30-19B-06	SUPERSTRUCTURE DETAILS	150'-0 BRIDGE - NON-EPOXY COATED REINFORCING
J30-19E-06	SUPERSTRUCTURE DETAILS	150'-0 BRIDGE - EPOXY COATED REINFORCING
J30-20-06	SUPERSTRUCTURE DETAILS ALL BRIDGES	
J30-21-06	SUPERSTRUCTURE DETAILS ALL BRIDGES	
J30-22-06	SUPERSTRUCTURE DETAILS ALL BRIDGES	
J30-23-06	MONOLITHIC PIER CAP DETAILS ALL BRIDGES	
J30-24-06	MONOLITHIC PIER CAP DETAILS ALL BRIDGES	
J30-25-06	NON-MONOLITHIC PIER CAP DETAILS ALL BRIDGES	
J30-26-06	NON-MONOLITHIC PIER CAP DETAILS ALL BRIDGES	
J30-27-06	ABUTMENT DETAILS 0° SKEW - TIMBER PILING	
J30-28-06	ABUTMENT DETAILS 15° SKEW - TIMBER PILING	
J30-29-06	ABUTMENT DETAILS 30° SKEW - TIMBER PILING	
J30-30-06	ABUTMENT DETAILS 30° SKEW - TIMBER PILING	
J30-31-06	ABUTMENT DETAILS 45° SKEW - TIMBER PILING	
J30-32-06	ABUTMENT DETAILS 45° SKEW - TIMBER PILING	
J30-33-06	ABUTMENT DETAILS - TIMBER PILING	
J30-34-06	ABUTMENT DETAILS 0° SKEW - STEEL PILING	
J30-35-06	ABUTMENT DETAILS 15° SKEW - STEEL PILING	
J30-36-06	ABUTMENT DETAILS 30° SKEW - STEEL PILING	
J30-37-06	ABUTMENT DETAILS 45° SKEW - STEEL PILING	
J30-38-06	ABUTMENT DETAILS 45° SKEW - STEEL PILING	
J30-39-06	ABUTMENT DETAILS - STEEL PILING	
J30-40-06	BARRIER RAIL DETAILS	
J30-41-06	BARRIER RAIL DETAILS	
J30-42-06	BARRIER RAIL END SECTION	
J30-43-06	OPEN BARRIER RAIL DETAILS	
J30-44-06	OPEN BARRIER RAIL DETAILS	
J30-45-06	SUBDRAIN DETAILS	
J30-46-06	WING ARMORING & MACADAM STONE DETAILS	
J30-47-06	ABUTMENT BACKFILL DETAILS - 0° SKEWS	
J30-48-06	ABUTMENT BACKFILL DETAILS - 15°, 30°, & 45° SKEWS	

REVISED 06-2013: THE GENERAL NOTES AND SPECIFICATIONS MOVED TO STANDARD SHEET J30-01A-06.
REVISED 09-2020: UPDATED BRIDGE ENGINEER SIGNATURE.

09-2020
LATEST REVISION DATE

APPROVED BY BRIDGE ENGINEER

IOWA DOT Highway Division

STANDARD DESIGN - 30' ROADWAY, 3 SPAN BRIDGES

CONTINUOUS CONCRETE SLAB BRIDGES

NOVEMBER, 2006

INDEX SHEET

J30-01-06

GENERAL NOTES:

THE J30-06 BRIDGE STANDARDS, IF PROPERLY USED, PROVIDE THE STRUCTURAL PLANS NECESSARY TO CONSTRUCT THREE SPAN 30' ROADWAY CONTINUOUS CONCRETE SLAB BRIDGES WITH LENGTHS OF 70'-0, 80'-0, 90'-0, 100'-0, 110'-0, 120'-0, 130'-0, 140'-0 AND 150'-0.

THESE BRIDGES MAY BE BUILT ON A 0°, 15°, 30° OR 45° SKEW. THESE PLANS SHOW THE BRIDGES SKEWED IN ONE DIRECTION, BUT ALL DIMENSIONS AND DETAILS WOULD BE THE SAME FOR THE OPPOSITE SKEW.

THESE STANDARDS GIVE MOST OF THE INFORMATION NECESSARY TO BUILD THESE BRIDGES. HOWEVER, THE FOLLOWING ADDITIONAL INFORMATION IS REQUIRED FOR USE ON PRIMARY ROUTES. FOR SECONDARY ROUTES THE ENGINEER MAY NOT REQUIRE ALL SHEETS TO BE PROVIDED:

1. TITLE SHEET WITH ENGINEERS SEAL
2. ESTIMATED QUANTITIES TOTALS INCLUDING CLASS 20 EXCAVATION FOR BRIDGE
3. SITUATION PLAN LAYOUT OF BRIDGE
4. TOP OF SLAB ELEVATIONS LAYOUT
5. BOTTOM OF ABUTMENT FOOTING ELEVATIONS
6. BOTTOM OF PIER CAP ELEVATIONS
7. PILING DESIGN INFORMATION
8. SLOPE PROTECTION LAYOUT IF NEEDED
9. CONDUIT LAYOUT
10. LIGHTING LAYOUT IF NEEDED

FOR CLARITY, MOST SECTIONS SHOWN ON THE FOLLOWING SHEETS ARE DRAWN WITH BARRIER RAIL ONLY. THESE SECTIONS WILL BE IDENTICAL FOR OPEN RAIL DESIGN WITH ANY MODIFICATIONS SHOWN ON SHEET J30-43-06 AND J30-44-06.

THESE BRIDGES ARE DESIGNED FOR HL93 LOADING PLUS 20 LBS. PER SQ. FT. OF ROADWAY FOR FUTURE WEARING SURFACE. CONTROL OF CRACKING BY DISTRIBUTION OF REINFORCEMENT FOR SLAB DESIGN BASED ON PRE LRFD 2005 INTERIMS.

NOTE THAT WHEN APPROACH PAVEMENT IS TO BE PLACED, THE TEMPORARY PAVING BLOCKS SHALL BE REMOVED AND A PROPER JOINT FOR EXPANSION SHALL BE PROVIDED BETWEEN THE BRIDGE AND THE APPROACH PAVING.

THE FLOOR SLAB AS SHOWN INCLUDES $\frac{1}{2}$" INTEGRAL WEARING SURFACE.

THE ABUTMENTS FOR THESE BRIDGES ARE BUILT INTEGRAL WITH THE SUPERSTRUCTURE. THEREFORE, IT IS IMPORTANT THAT A PROPER JOINT FOR EXPANSION BE PROVIDED BETWEEN THE BRIDGE AND APPROACH PAVING, WHEN APPROACH PAVING IS NEEDED.

THE ABUTMENT DESIGN UTILIZED ON THESE BRIDGES RESTRICTS THEIR USE IN THE FOLLOWING MANNER:

(1) THESE BRIDGES ARE NOT TO BE USED WHEN POINT BEARING FOR THE ABUTMENT STEEL PILING WOULD BE OBTAINED ON ROCK AT A DISTANCE LESS THAN 15 FEET FROM THE BOTTOM OF FOOTING.

(2) FOR THE 140 FOOT AND 150 FOOT LONG BRIDGES THE ABUTMENT PILING ARE TO BE DRIVEN THROUGH OVERSIZED HOLES PREBORED TO A MINIMUM OF 10 FEET BELOW THE BELOW THE BOTTOM OF FOOTING. THE PREBORED HOLES SHALL BE IN ACCORDANCE WITH SECTION 2501.03, Q OF THE STANDARD SPECIFICATIONS. THE ELEVATION OF THE BOTTOM OF THE PREBORED HOLE SHALL BE SHOWN ON THE PLANS.

(3) IF ROCK IS ENCOUNTERED LESS THAN 5 FOOT BELOW THE PREBORED HOLES, A SPECIAL ANALYSIS WILL BE REQUIRED. WHEN PREBORING IS NOT REQUIRED FOR THE ABUTMENT FOOTING AND ROCK IS ENCOUNTERED LESS THAN 10 FOOT BELOW THE BOTTOM OF ABUTMENT FOOTING, A SPECIAL ANALYSIS WILL BE REQUIRED.

THE PIERS AND ABUTMENTS FOR THESE STANDARDS HAVE BEEN DESIGNED FOR THE USE OF BOTH FRICTION AND POINT BEARING PILES. IT IS NECESSARY THAT THE TYPE AND LENGTH FOR BOTH THE ABUTMENT AND PIER PILES BE DESIGNATED ON THE FRONT SHEET OF THE PLANS.

THE INTEGRAL ABUTMENTS AND PILE BENTS FOR THESE J30 STANDARDS HAVE BEEN DESIGNED FOR THE USE OF VARIOUS TYPES OF PILE FOOTINGS AS FOLLOWS.

- INTEGRAL ABUTMENTS: TIMBER PILES OR HP 10x42 PILES AT BRIDGE DESIGN MANUAL(BDM) ARTICLE 6.2.6.1 STRUCTURAL RESISTANCE LEVEL-1 (SRL-1)

- PILE BENTS: STANDARD CONCRETE-FILLED STEEL PIPE PILES (P10L), STANDARD PRESTRESSED CONCRETE PILES (P10L), OR STANDARD H-PILES (P10L AND SRL-1)

BECAUSE THESE BRIDGE STANDARDS HAVE BEEN REVISED FOR LRFD BASED ON 2012-COMPLETED IOWA STATE UNIVERSITY RESEARCH, FOR PILE FOUNDATIONS THE DESIGNER WILL NEED TO DETERMINE THE CONSTRUCTION CONTROL METHOD, CONTRACT LENGTH, AND DRIVING TARGET AND GIVE THAT INFORMATION ON THE FRONT SHEET OF THE PLANS. BRIDGE DESIGN MANUAL CADD NOTES E177, E718, E719, E818, AND E819 ARE APPROPRIATE FOR THAT PURPOSE. THE NOTES, AS WELL AS THE BRIDGE DESIGN MANUAL AND DESIGN EXAMPLES, ARE AVAILABLE ON THE OFFICE OF BRIDGES AND STRUCTURES WEB SITE: HTTP://WWW.IOWADOT.GOV/BRIDGE/INDEX.HTM.

STRUCTURAL RESISTANCE LEVEL-1 (SRL-1) REPLACES THE 50 TON STEEL PILE DESIGNATION.

FOR MORE INFORMATION ON SRL-1, SEE THE BRIDGE DESIGN MANUAL, LOCATED ON THE IOWA DEPARTMENT OF TRANSPORTATION, OFFICE OF BRIDGES AND STRUCTURES WEB SITE.

THESE STANDARDS CAN BE USED FOR BRIDGES WITH OR WITHOUT EPOXY COATED REINFORCING. REINFORCING BAR LAP LENGTHS ARE BASED ON THE USE OF EPOXY COATED REINFORCING, BUT NEED NOT BE MODIFIED IF NON-COATED BARS ARE TO BE USED. THE DESIGNER SHALL SPECIFY THE APPROPRIATE BID ITEM NO. FOR THE EPOXY COATED OR NON-EPOXY COATED REINFORCING.

IT IS RECOMMENDED THAT THE EPOXY COATED REINFORCING OPTION BE USED IF IT IS ANTICIPATED THAT THE BRIDGE DECK AND/OR THE BRIDGE APPROACHES WILL BE CHEMICALLY TREATED FOR THE REMOVAL OF ICE OR SNOW.

IF EPOXY COATED BARS ARE USED IN THE DECK, THEN ALL BARS USED IN THE ABUTMENT (FOOTING AND BACKWALL), CAP, AND BARRIER RAILS SHALL BE EPOXY COATED.

FOR PIERS SUBJECT TO SCOUR THE DESIGN BEARING SHALL BE OBTAINED BELOW SCOUR ELEVATION. SCOUR ELEVATION SHALL BE SHOWN ON THE FRONT SHEET.

KEYWAY DIMENSIONS SHOWN ON THE PLANS ARE BASED ON NOMINAL DIMENSIONS UNLESS STATED OTHERWISE. IN ADDITION, THE BEVEL USED ON THE KEYWAY SHALL BE LIMITED TO A MAXIMUM OF 10 DEGREES FROM VERTICAL.

THESE BRIDGE PLANS LABEL ALL REINFORCING STEEL WITH ENGLISH NOTATION (5a1 IS $\frac{5}{8}$ INCH DIAMETER BAR). ENGLISH REINFORCING STEEL RECEIVED IN THE FIELD MAY DISPLAY THE FOLLOWING "BAR DESIGNATION". THE "BAR DESIGNATION" IS THE STAMPED IMPRESSION ON THE REINFORCING BARS, AND IS EQUIVALENT TO THE BAR DIAMETER IN MILLIMETERS.

ENGLISH SIZE	3	4	5	6	7	8	9	10	11
BAR DESIGNATION	10	13	16	19	22	25	29	32	36

SPECIFICATIONS:

DESIGN: AASHTO LRFD, SERIES OF 2004 WITH INTERIM 2005.

CONSTRUCTION: IOWA DEPARTMENT OF TRANSPORTATION STANDARD SPECIFICATIONS FOR HIGHWAY AND BRIDGE CONSTRUCTION, SERIES 2012, PLUS APPLICABLE GENERAL SUPPLEMENTAL SPECIFICATIONS, DEVELOPMENTAL SPECIFICATIONS, SUPPLEMENTAL SPECIFICATIONS AND SPECIAL PROVISIONS SHALL APPLY TO CONSTRUCTION WORK ON THIS PROJECT.

DESIGN STRESSES:

DESIGN STRESSES FOR THE FOLLOWING MATERIALS ARE IN ACCORDANCE WITH THE AASHTO LRFD BRIDGE DESIGN SPECIFICATIONS, 3rd Ed, SERIES OF 2004.

REINFORCING STEEL IN ACCORDANCE WITH LRFD AASHTO SECTION 5, GRADE 60.

CONCRETE IN ACCORDANCE WITH LRFD AASHTO SECTION 5, f'c = 3,500 PSI,

STRUCTURAL STEEL IN ACCORDANCE WITH LRFD AASHTO SECTION 6. ASTM A709 GRADE 36 OR GRADE 50 (AASHTO M270 GRADE 36 OR GRADE 50).

n = 9 FOR TENSION STEEL

2n = 18 FOR COMPRESSION STEEL

HL-93 LIVE LOAD PLUS 20 LBS. PER SQ. FT. FOR FUTURE WEARING SURFACE.

END SPAN LENGTH IS USED TO CALCULATE EQUIVALENT WIDTH IN LIVE LOAD DISTRIBUTION.

SIX FOOT OF APPROACH SLAB DEAD & LIVE LOAD INCLUDED IN ABUTMENT LOADS.

CONTROL OF CRACKING BY DISTRIBUTION OF REINFORCEMENT FOR SLAB DESIGN BASED ON PRE 2005 LRFD INTERMS.

09-2020
LATEST REVISION DATE

APPROVED BY BRIDGE ENGINEER

IOWADOT Highway Division

STANDARD DESIGN - 30' ROADWAY, 3 SPAN BRIDGES

CONTINUOUS CONCRETE SLAB BRIDGES

NOVEMBER, 2006

GENERAL NOTES

J30-01A-06

REVISED 06-2013: THIS STANDARD RENAMED TO J30-01A-06. INDEX SHEET INFORMATION ON STANDARD J30-01-06.
REVISED 09-2020: UPDATED BRIDGE ENGINEER SIGNATURE.

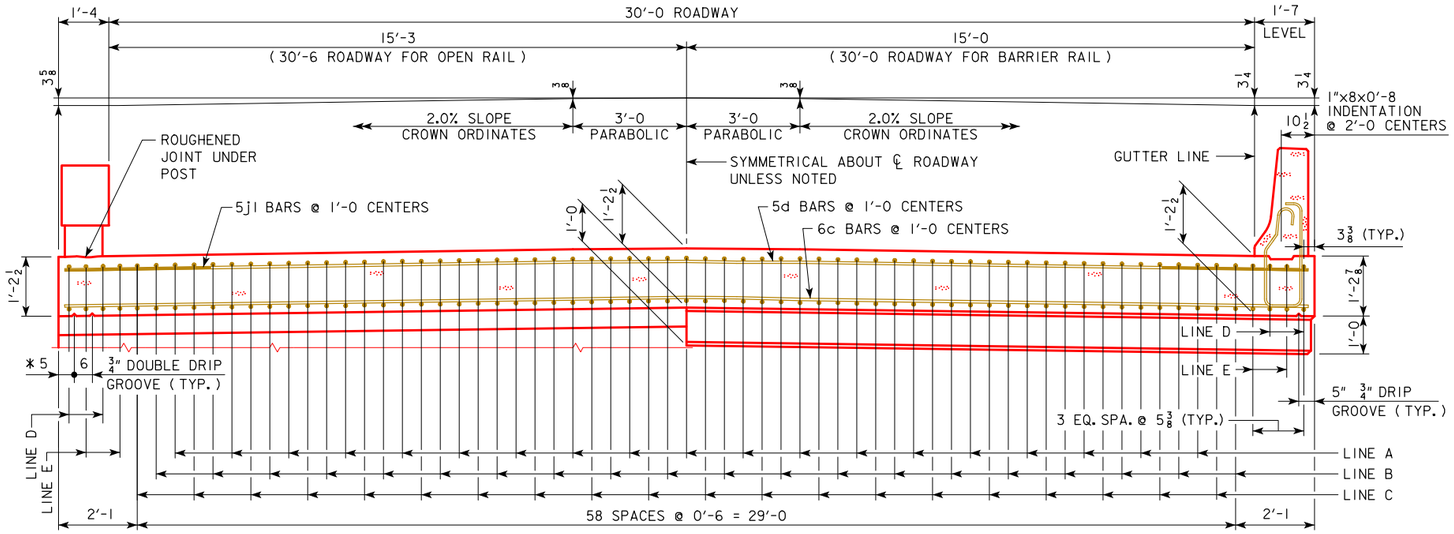

HALF SECTION NEAR ABUTMENT

HALF SECTION NEAR PIER

* NOTE: DOUBLE DRIP GROOVES FOR OPEN RAIL OPTION ONLY.

SLAB CROSS-SECTIONAL AREA FOR OPEN RAIL = 40.08 SQ. FT.

NOTE: TOP LONGITUDINAL REINFORCING STEEL IS TO BE PARALLEL TO AND 2½" CLEAR BELOW TOP OF SLAB. BOTTOM LONGITUDINAL REINFORCING STEEL IS TO BE PARALLEL TO AND 1½" CLEAR ABOVE BOTTOM OF SLAB. REINFORCING STEEL IS TO BE SECURELY WIRED IN PLACE AND ADEQUATELY SUPPORTED ON BAR CHAIRS BEFORE CONCRETE IS POURED.
I.M. 451.01 REQUIREMENTS SHALL APPLY FOR BAR CHAIRS.

SLAB CROSS-SECTIONAL AREA FOR BARRIER RAIL = 40.13 SQ. FT.

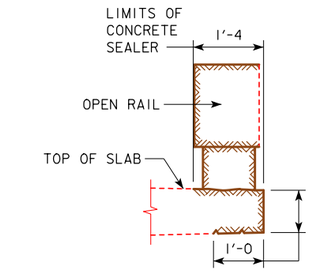

CONCRETE SEALER LIMITS FOR OPEN RAILS

CONCRETE SEALER SHALL BE APPLIED TO BOTH SIDES OF BRIDGE SLAB ON THE TOP, EDGE OF SLAB AND UNDER THE SLAB. THE CONCRETE SEALER SHALL ALSO BE APPLIED TO THE OPEN RAIL ON THE TOP, TRAFFIC FACE SIDE, BOTTOM OF RAIL, AND ON ALL SIDES OF THE OPEN RAIL POSTS.

THE CONCRETE SEALER LIMITS ARE SHOWN IN THE DETAIL AND SHALL APPLY TO THE FULL LENGTH OF BRIDGE. CONCRETE SEALER SHALL BE APPLIED IN ACCORDANCE WITH ARTICLE 2403.03, P, 3 OF THE STANDARD SPECIFICATIONS.

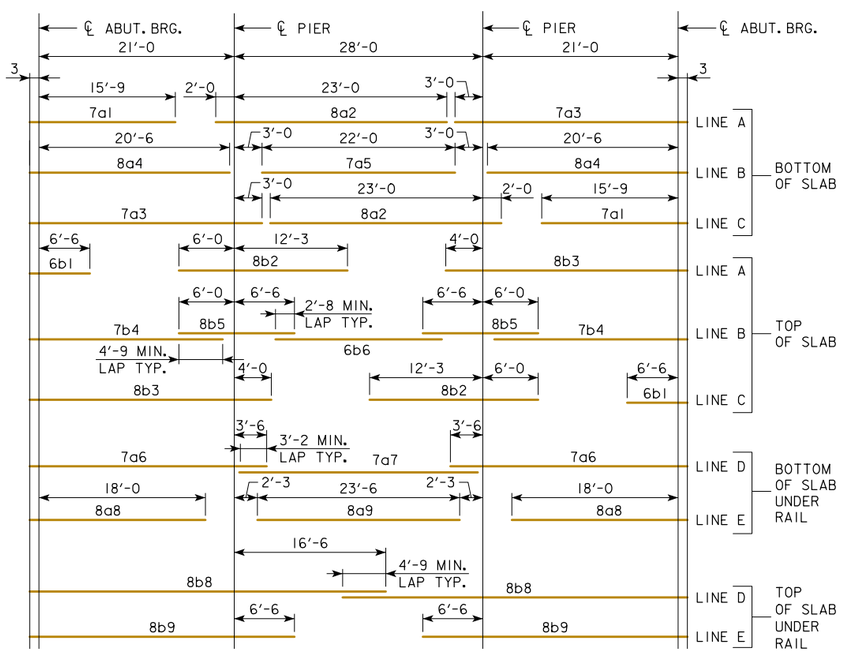

PLACEMENT FOR LONGITUDINAL REINFORCEMENT

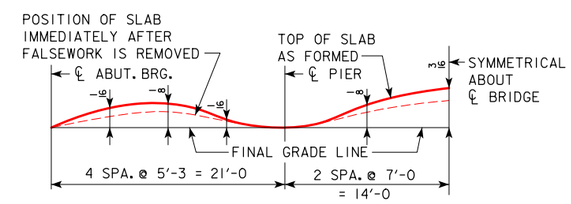

FORM CAMBER DIAGRAM

THIS DIAGRAM SHOWS THE FORM CAMBER REQUIRED TO COMPENSATE FOR THE ANTICIPATED ULTIMATE DEAD LOAD DEFLECTION. THE ABOVE DIMENSIONS DO NOT INCLUDE ANY ALLOWANCE FOR FORM DEFLECTION OR FALSEWORK SETTLEMENT.

09-2020
LATEST REVISION DATE

APPROVED BY BRIDGE ENGINEER

IOWA DOT Highway Division

STANDARD DESIGN - 30' ROADWAY, 3 SPAN BRIDGES

CONTINUOUS CONCRETE SLAB BRIDGES

NOVEMBER, 2006

SUPERSTRUCTURE DETAILS
70'-0 BRIDGE

EPOXY COATED REINFORCING

J30-02E-06

REVISED 07-2016: DATE ON SHEET CHANGED TO CORRECT CLERICAL ERROR.
REVISED 09-2020: UPDATED BRIDGE ENGINEER SIGNATURE.

BILL OF REINFORCING STEEL FOR SUPERSTRUCTURE - 70' BRIDGE

LOCATION \ SKEW	SHAPE	BAR	0° NO.	0° LENGTH	0° WEIGHT	15° NO.	15° LENGTH	15° WEIGHT	30° NO.	30° LENGTH	30° WEIGHT	45° NO.	45° LENGTH	45° WEIGHT
SLAB LONGITUDINAL BOTTOM		7a1	39	16'-0	1276	39	16'-0	1276	39	16'-0	1276	39	16'-0	1276
SLAB LONGITUDINAL BOTTOM		8a2	39	25'-0	2604	39	25'-0	2604	39	25'-0	2604	39	25'-0	2604
SLAB LONGITUDINAL BOTTOM		7a3	39	24'-3	1934	39	24'-3	1934	39	24'-3	1934	39	24'-3	1934
SLAB LONGITUDINAL BOTTOM		8a4	40	20'-9	2217	40	20'-9	2217	40	20'-9	2217	40	20'-9	2217
SLAB LONGITUDINAL BOTTOM, AT RAIL		7a5	20	22'-0	900	20	22'-0	900	20	22'-0	900	20	22'-0	900
SLAB LONGITUDINAL BOTTOM, AT RAIL		7a6	8	24'-9	405	8	24'-9	405	8	24'-9	405	8	24'-9	405
SLAB LONGITUDINAL BOTTOM, AT RAIL		7a7	4	27'-4	224	4	27'-4	224	4	27'-4	224	4	27'-4	224
SLAB LONGITUDINAL BOTTOM, AT RAIL		8a8	8	18'-3	390	8	18'-3	390	8	18'-3	390	8	18'-3	390
SLAB LONGITUDINAL BOTTOM, AT RAIL		8a9	4	23'-6	251	4	23'-6	251	4	23'-6	251	4	23'-6	251
SLAB LONGITUDINAL TOP		6b1	39	9'-0	528	39	9'-0	528	39	9'-0	528	39	9'-0	528
SLAB LONGITUDINAL TOP		8b2	39	18'-3	1901	39	18'-3	1901	39	18'-3	1901	39	18'-3	1901
SLAB LONGITUDINAL TOP		8b3	39	27'-6	2864	39	27'-6	2864	39	27'-6	2864	39	27'-6	2864
SLAB LONGITUDINAL TOP		7b4	40	22'-3	1820	40	22'-3	1820	40	22'-3	1820	40	22'-3	1820
SLAB LONGITUDINAL TOP		8b5	40	12'-6	1335	40	12'-6	1335	40	12'-6	1335	40	12'-6	1335
SLAB LONGITUDINAL TOP		6b6	20	20'-4	611	20	20'-4	611	20	20'-4	611	20	20'-4	611
SLAB LONGITUDINAL TOP, AT RAIL		8b8	8	40'-0	855	8	40'-0	855	8	40'-0	855	8	40'-0	855
SLAB LONGITUDINAL TOP, AT RAIL		8b9	8	30'-0	641	8	30'-0	641	8	30'-0	641	8	30'-0	641
SLAB TRANSVERSE, BOTTOM		6c1	67	32'-10	3305	67	34'-0	3422	54	32'-10	2664	40	32'-10	1973
SLAB TRANSVERSE ENDS, BOTTOM		6c2	-	-	-	-	-	-	30	VARIES	797	56	VARIES	1486
SLAB TRANSVERSE, TOP		5d1	67	32'-10	2295	67	34'-0	2376	54	32'-10	1850	40	32'-10	1370
SLAB TRANSVERSE ENDS, TOP		5d2	-	-	-	-	-	-	30	VARIES	553	56	VARIES	1032
SLAB, TRANSVERSE AT ABUTMENT		8e1	18	32'-10	1578	-	-	-	-	-	-	-	-	-
SLAB, TRANSVERSE AT ABUTMENT		8e2	-	-	-	18	33'-11	1631	18	37'-6	1803	18	45'-4	2179
SLAB, HAIRPINS, AT ABUTMENT		6e3	72	5'-0	541	72	5'-1	550	72	5'-5	586	72	6'-1	658
SLAB, DIAGONALS, AT ABUTMENT		6e4	72	5'-11	640	72	5'-11	640	72	5'-11	640	72	5'-11	640
PIER CAP HOOPS		5h1	48	6'-11	347	48	6'-11	347	60	6'-11	433	72	6'-11	520
PIER CAP ENDS		8h2	4	14'-5	154	4	14'-5	154	4	14'-5	154	4	14'-5	154
PIER CAP, BOTTOM LONGITUDINAL		8h3	8	29'-10	638	8	30'-11	661	8	34'-5	736	8	42'-2	901
PIER CAP, TOP LONGITUDINAL		8h4	4	32'-10	351	4	34'-0	364	4	37'-11	405	4	46'-6	497
TOP OF SLAB, TRANSVERSE, AT RAIL		5j1	132	8'-6	1171	132	8'-6	1171	132	8'-6	1171	130	8'-6	1153
WING, VERTICAL		5m1	40	4'-5	185	40	4'-5	185	40	4'-5	185	40	4'-5	185
WING, HORIZONTAL BACK FACE		5n1	24	6'-8	167	24	6'-8	167	24	6'-8	167	24	6'-8	167
WING, HORIZONTAL TRAFFIC FACE		5n3	24	6'-9	169	24	6'-9	169	24	6'-9	169	24	6'-9	169
** PAVING BLOCK LIFTING HOOPS		5z1	10	2'-10	30	10	2'-10	30	10	2'-10	30	10	2'-10	30
SUB TOTAL - LBS.					32,327			32,623			33,099			33,870
BARRIER RAIL - SEE LIST ON RAIL SHEET J30-41-06					4957			4957			4957			4957
OPEN RAIL - SEE LIST ON RAIL SHEET J30-44-06					5100			5100			5100			5100
TOTAL - LBS. WITH MONOLITHIC PIER CAP		WITH BARRIER RAIL			37,284			37,580			38,056			38,827
		WITH OPEN RAIL			37,427			37,723			38,199			38,970
TOTAL - LBS. WITH NON-MONOLITHIC PIER CAP		WITH BARRIER RAIL			35,794			36,054			36,328			36,755
SAME AS ABOVE EXCEPT ALL "h" BARS DELETED		WITH OPEN RAIL			35,937			36,197			36,471			36,898

** BARS MAY BE NON-COATED AT CONTRACTOR'S OPTION.

ESTIMATED QUANTITIES FOR SUPERSTRUCTURE - 70' BRIDGE

ITEM		SKEW	WITH MONOLITHIC PIER CAP 0°	15°	30°	45°	WITH NON-MONOLITHIC PIER CAP 0°	15°	30°	45°
WITH BARRIER RAIL	*STRUCTURAL CONCRETE (BRIDGE)	C.Y.	131.2	132.0	134.9	141.0	126.6	127.3	129.6	134.6
	REINFORCING STEEL EPOXY COATED	LBS.	37,284	37,580	38,056	38,827	35,794	36,054	36,328	36,755
	CONCRETE BARRIER OR OPEN RAIL	LIN. FT.	162.0	162.2	162.9	164.5	162.0	162.2	162.9	164.5
WITH OPEN RAIL	*STRUCTURAL CONCRETE (BRIDGE)	C.Y.	131.1	131.9	134.8	140.8	125.5	127.1	129.5	134.5
	REINFORCING STEEL EPOXY COATED	LBS.	37,427	37,723	38,199	38,970	35,937	36,197	36,471	36,898

* INCLUDES 4 WINGS @ 0.68 C.Y. EACH AND 2 TEMPORARY PAVING BLOCKS; EXCLUDES RAIL CONCRETE.

BENT BAR DETAILS

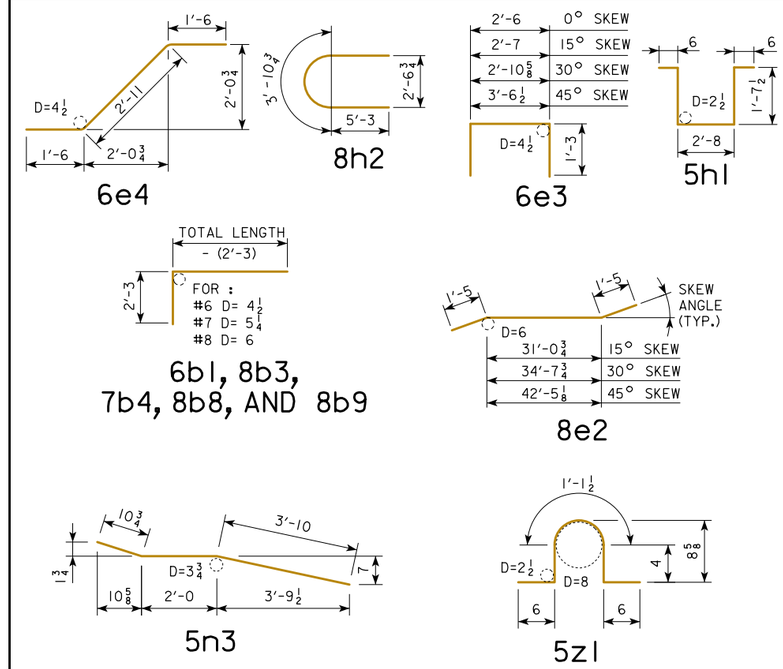

NOTE: ALL DIMENSIONS ARE OUT TO OUT. D = PIN DIAMETER.

REVISED 07-2009: OPEN RAIL REINF. QTYS. CHANGED WHICH CHANGED TOTAL REINF. QTYS.
REVISED 09-2020: UPDATED BRIDGE ENGINEER SIGNATURE. CHANGED PAVING BLOCK LIFTING HOOP BAR MARK, (WAS 5x1).

09-2020
LATEST REVISION DATE

APPROVED BY BRIDGE ENGINEER

IOWA DOT Highway Division

STANDARD DESIGN - 30' ROADWAY, 3 SPAN BRIDGES

CONTINUOUS CONCRETE SLAB BRIDGES

NOVEMBER, 2006

SUPERSTRUCTURE DETAILS 70'-0 BRIDGE

EPOXY COATED REINFORCING

J30-03E-06

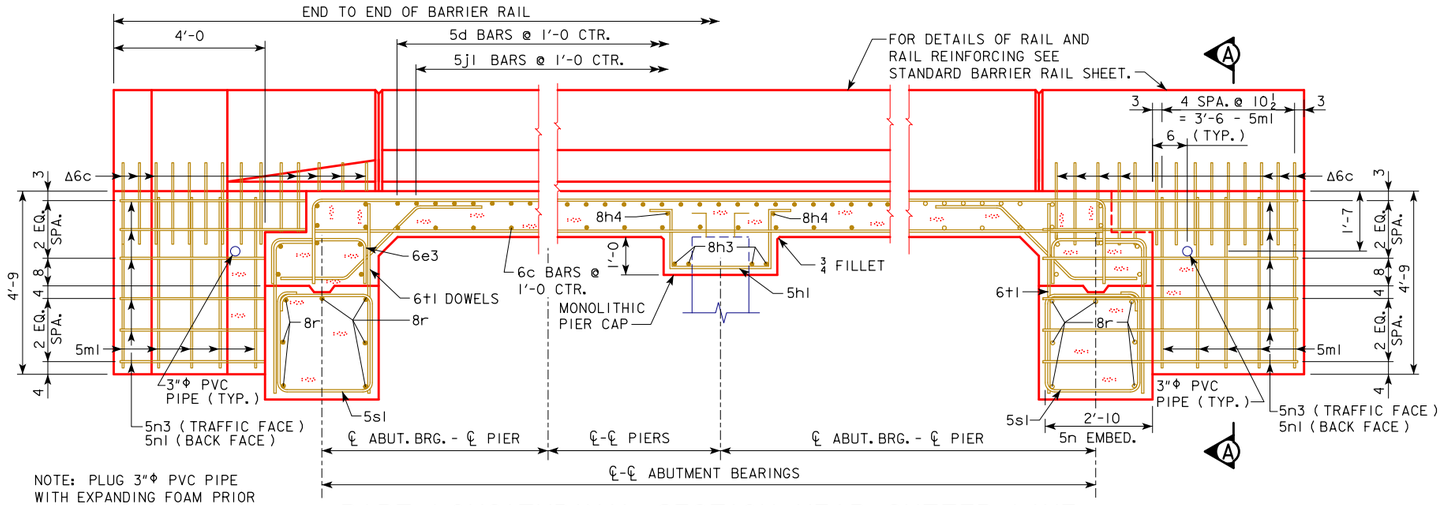

NOTE: PLUG 3"Φ PVC PIPE WITH EXPANDING FOAM PRIOR TO BACKFILLING BEHIND ABUTMENTS.

PART LONGITUDINAL SECTION NEAR GUTTER LINE

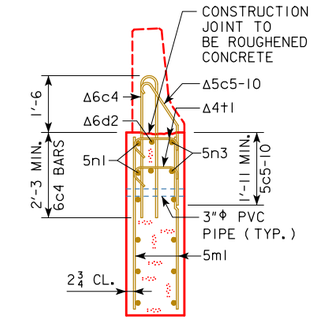

SECTION A-A

Δ NOTE: SEE END SECTION DETAILS IN THESE PLANS FOR DETAILS OF BARRIER RAIL END SECTION. REINFORCING BARS 6c3, 6c4, 5c5-10, 6d2 & 4t1 ARE INCLUDED IN THE SUPERSTRUCTURE QUANTITIES.

NOTE: 5m1, 5n1 & 5n3 BARS ARE INCLUDED IN SUPERSTRUCTURE BAR LIST. 5c, 6c, 6d & 4t1 BARS ARE INCLUDED IN BARRIER RAIL BAR LIST.

SUPERSTRUCTURE NOTES:

THIS BRIDGE IS DESIGNED FOR HL-93 LOADING PLUS AN ALLOWANCE OF 20 POUNDS PER SQUARE FOOT OF ROADWAY FOR FUTURE WEARING SURFACE.

THE SLAB AS SHOWN INCLUDES A ½ INCH INTEGRAL WEARING SURFACE.

THE MINIMUM CLEAR DISTANCE FROM FACE OF CONCRETE TO NEAR REINFORCING BAR SHALL BE 2 INCHES UNLESS OTHERWISE NOTED OR SHOWN. ALL REINFORCING STEEL IS TO BE SECURELY WIRED IN PLACE. SEE "BAR CHAIR NOTE".

ALL REINFORCING SHALL BE GRADE 60.

THE CONCRETE SLAB IS TO BE PLACED WITH A MINIMUM OF CONSTRUCTION JOINTS. PROCEDURES FOR PLACING SLAB CONCRETE SHALL BE SUBMITTED FOR APPROVAL TOGETHER WITH A STATEMENT OF THE PROPOSED METHOD AND EVIDENCE THAT THE CONTRACTOR POSSESSES THE NECESSARY EQUIPMENT AND FACILITIES TO ACCOMPLISH THE REQUIRED RESULT. SLAB FALSEWORK SHALL BE REMOVED PRIOR TO CONSTRUCTION OF THE BARRIER RAILS, UNLESS SLAB CONSTRUCTION IS STAGED.

NOTE THAT WHEN PORTLAND CEMENT APPROACH PAVEMENT IS PLACED, COMPRESSIBLE JOINT MATERIAL MUST BE USED BETWEEN PAVEMENT AND END OF BRIDGE.

COST OF FURNISHING AND PLACING 3"Φ PVC PIPE IN EACH WING IS INCLUDED IN THE PRICE BID FOR STRUCTURAL CONCRETE.

BAR CHAIR NOTE:

TOP MAT OF REINFORCING STEEL IS TO BE SUPPORTED BY INDIVIDUAL BAR CHAIRS SPACED AT NOT MORE THAN 3'-0 CENTERS LONGITUDINALLY AND TRANSVERSELY. THE BOTTOM MAT OF REINFORCING STEEL IS TO BE SUPPORTED BY INDIVIDUAL BAR CHAIRS SPACED AT NOT MORE THAN 3'-0 CENTERS LONGITUDINALLY AND TRANSVERSELY, OR BY CONTINUOUS ROWS OF BAR HIGH CHAIRS OR SLAB BOLSTERS SPACED 4'-0 APART. I.M. 451.01 REQUIREMENTS SHALL APPLY FOR BAR CHAIRS, BAR HIGH CHAIRS, AND SLAB BOLSTERS.

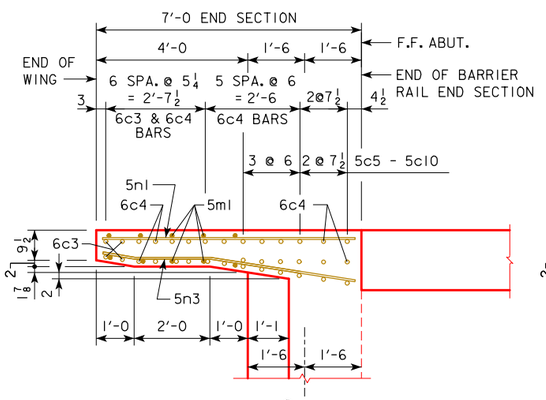

PART PLAN 0° SKEW

(RAILING NOT SHOWN)

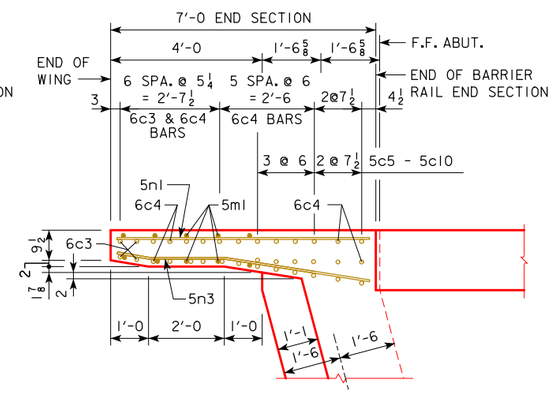

PART PLAN 15° SKEW

(RAILING NOT SHOWN)

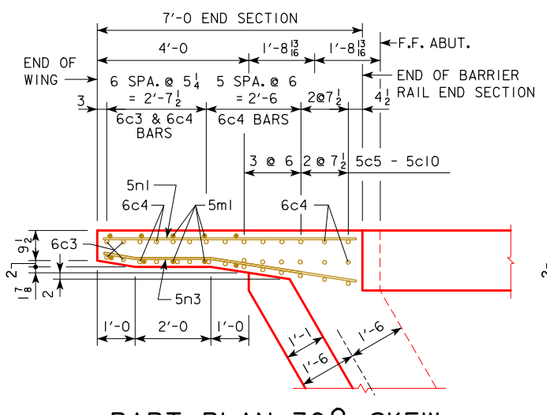

PART PLAN 30° SKEW

(RAILING NOT SHOWN)

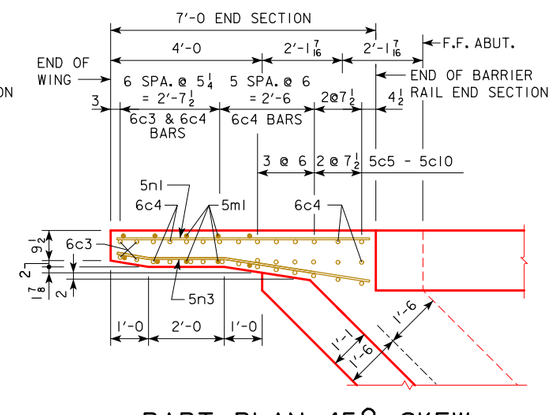

PART PLAN 45° SKEW

(RAILING NOT SHOWN)

NOTE: REINFORCING LAYOUT IN PART PLANS 0°, 15°, 30° & 45° SKEWS ARE FOR BARRIER RAIL ONLY. SEE SHEET J30-43-06 FOR OPEN RAIL.

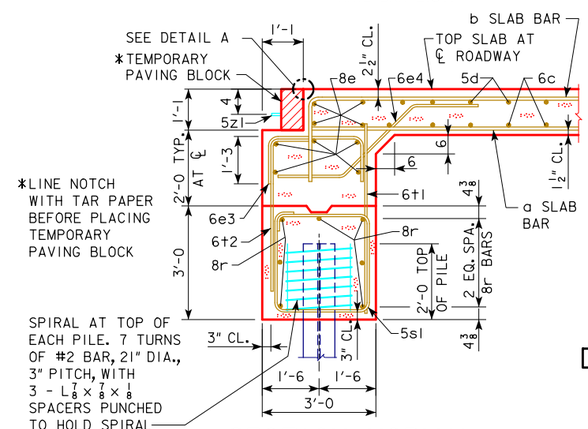

SECTION NORMAL TO ABUTMENT AT ℄

(BRIDGE LENGTHS 70'-110')

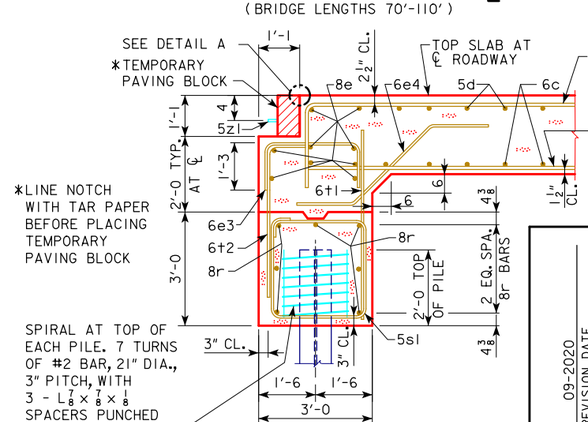

SECTION NORMAL TO ABUTMENT AT ℄

(BRIDGE LENGTHS 120'-150')

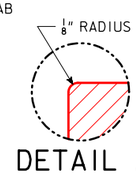

DETAIL A

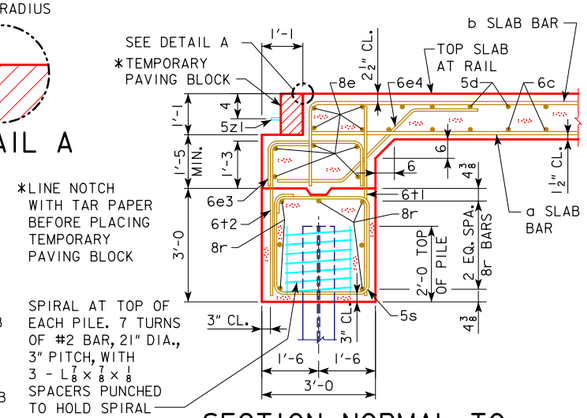

SECTION NORMAL TO ABUTMENT AT GUTTERLINE

REVISED 06-2012: I.M. REQUIREMENT ADDED TO BAR CHAIR NOTE.
REVISED 09-2020: UPDATED BRIDGE ENGINEER SIGNATURE. REVISED SUPERSTRUCTURE NOTES TO STATE, "SLAB FALSEWORK SHALL BE REMOVED PRIOR TO CONSTRUCTION OF THE BARRIER RAILS, UNLESS SLAB CONSTRUCTION IS STAGED." CHANGED PAVING BLOCK LIFTING HOOP BAR MARK, (WAS 5x1).

09-2020
LATEST REVISION DATE

APPROVED BY BRIDGE ENGINEER

IOWA DOT Highway Division

STANDARD DESIGN - 30' ROADWAY, 3 SPAN BRIDGES

CONTINUOUS CONCRETE SLAB BRIDGES

NOVEMBER, 2006

SUPERSTRUCTURE DETAILS ALL BRIDGES

J30-20-06

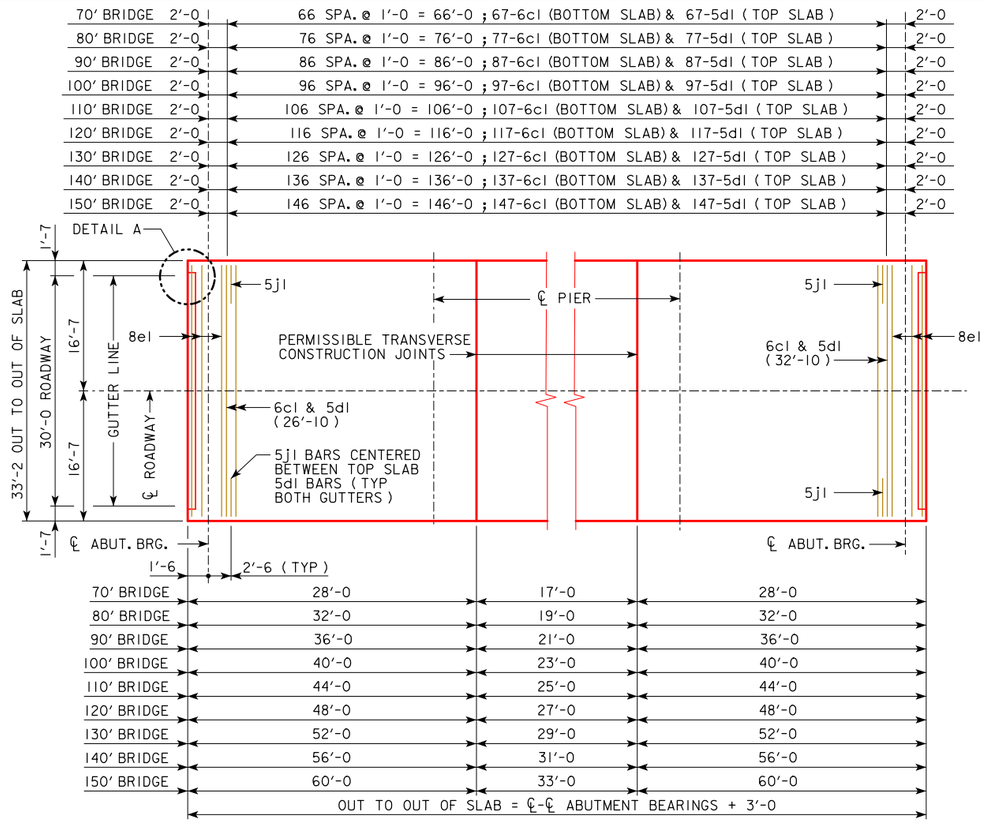

0° SKEW

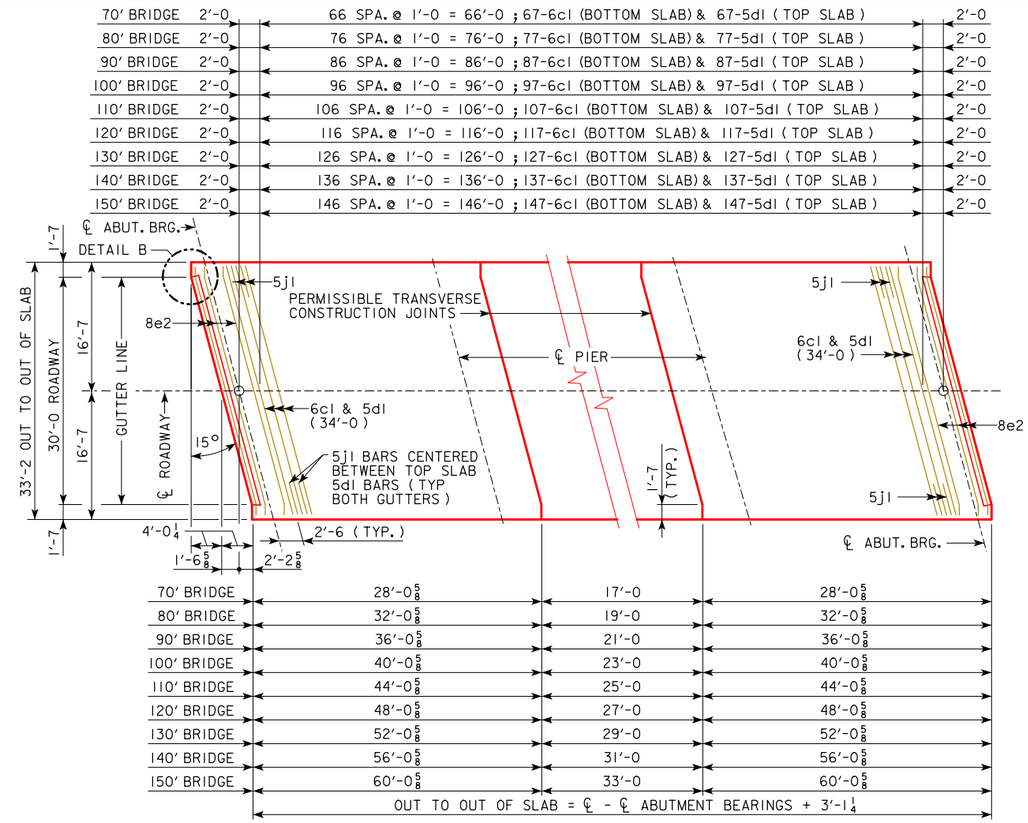

15° SKEW

TRANSVERSE REINFORCING STEEL LAYOUT

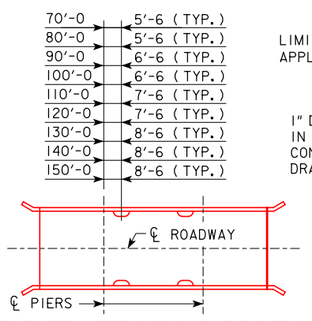

FLOOR DRAIN LOCATION

NOTE: 4" x 8" OUTSIDE DIMENSION ROLLED TUBE WITH 1/4" WALL THICKNESS MAY BE SUBSTITUTED FOR THE WELDED DRAIN SHOWN.

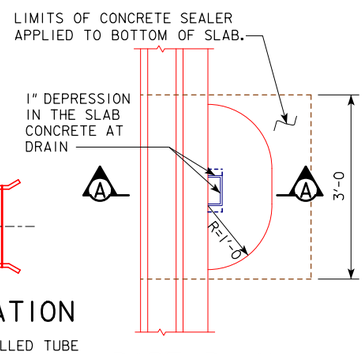

PART PLAN

FLOOR DRAIN DETAILS

(USE FOR BARRIER RAIL ONLY, NOT REQUIRED FOR OPEN RAIL)

NOTE: DRAINS ARE TO BE GALVANIZED. INCLUDE COST OF DRAINS IN PRICE BID FOR "STRUCTURAL CONCRETE". 4 DRAINS REQUIRED.

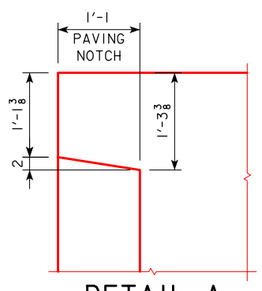

DETAIL A

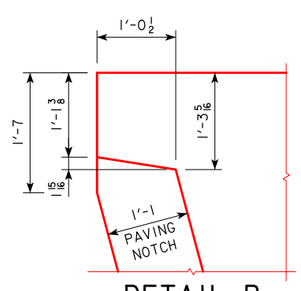

DETAIL B

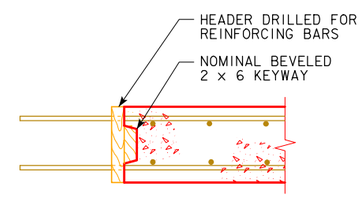

TRANSVERSE CONSTRUCTION JOINT

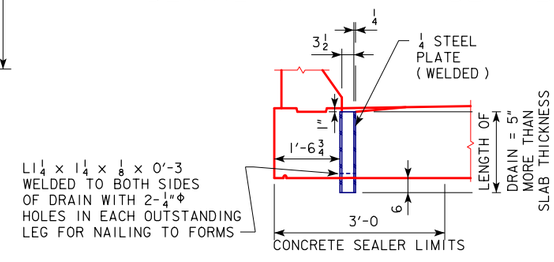

SECTION A-A

WEIGHT OF ONE FLOOR DRAIN			
SPAN	WEIGHT, LBS.	SPAN	WEIGHT, LBS.
70'-0	32	120'-0	41
80'-0	33	130'-0	43
90'-0	35	140'-0	45
100'-0	37	150'-0	48
110'-0	39		

TEMPORARY PAVING BLOCK		
SKEW	LENGTH	CONCRETE
0°	28'-0	0.7 C.Y.
15°	29'-0	0.7 C.Y.

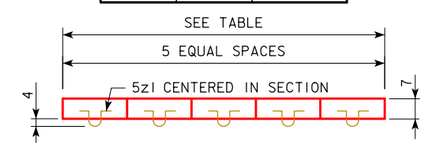

TEMPORARY PAVING BLOCK DETAIL

NOTE: TEMPORARY PAVING BLOCK TO BE USED WITH PAVED APPROACHES ONLY. LINE NOTCH WITH TAR PAPER BEFORE PLACING TEMPORARY PAVING BLOCK.

REVISED 07-2009: CHANGED THE DRAIN ANGLES DETAILS ON SECTION A-A.
REVISED 09-2020: UPDATED BRIDGE ENGINEER SIGNATURE. CHANGED PAVING BLOCK LIFTING HOOP BAR MARK, (WAS 5x1).

09-2020
LATEST REVISION DATE

APPROVED BY BRIDGE ENGINEER

IOWA DOT Highway Division

STANDARD DESIGN - 30' ROADWAY, 3 SPAN BRIDGES

CONTINUOUS CONCRETE SLAB BRIDGES

NOVEMBER, 2006

SUPERSTRUCTURE DETAILS
ALL BRIDGES

0° & 15° SKEW

J30-21-06

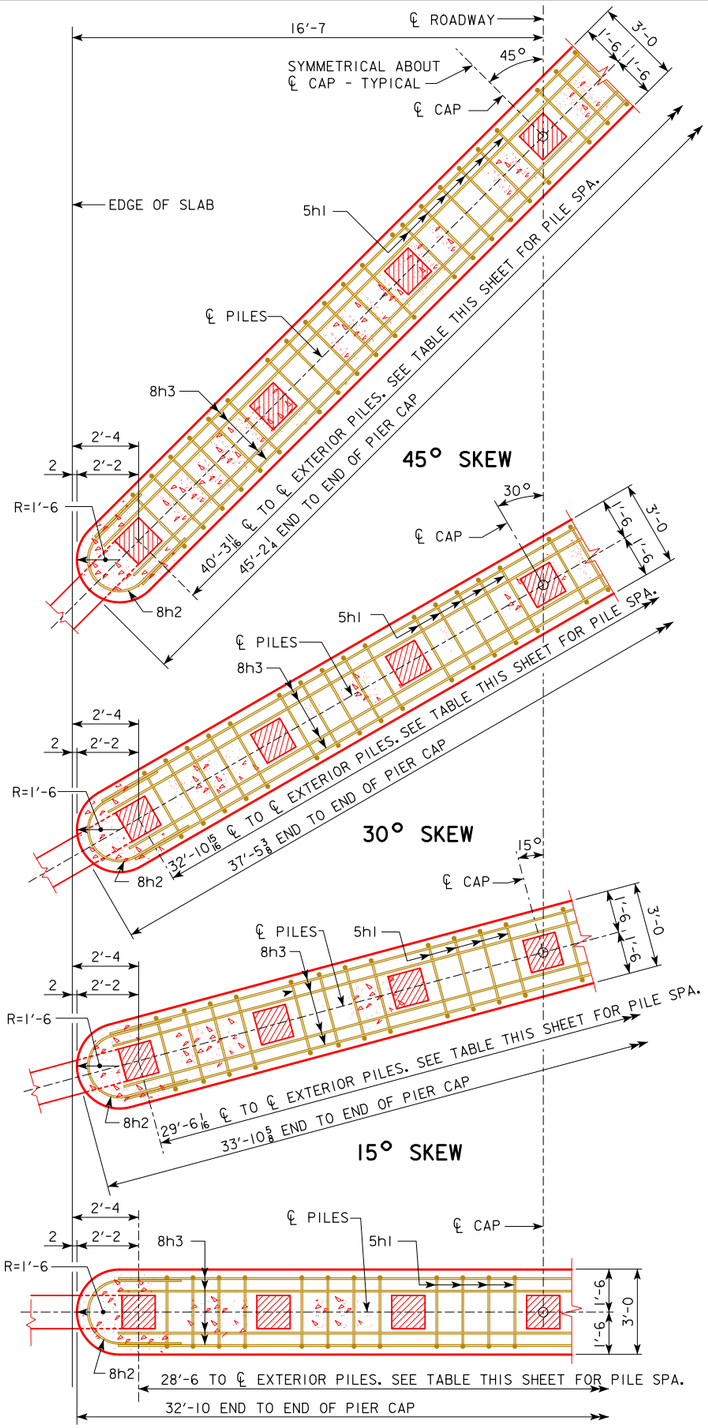

HALF SECTION BELOW SLAB

NOTE: NUMBER OF PILES AND STIRRUPS SHOWN ARE FOR A 70'-0 BRIDGE.
CAP DIMENSIONS ARE TYPICAL FOR ALL BRIDGES.

TYPICAL NUMBERS OF PILES AND SPACINGS AND FACTORED PIER LOADS

BRIDGE LENGTH	70'-0	80'-0	90'-0	100'-0	110'-0	120'-0	130'-0	140'-0	150'-0
① TYP. NO. OF PILES	7	7	8	9	10	11	12	12	12
TYP. PILE SPACES @ 0°	6 SPA. @ 4'-9	6 SPA. @ 4'-9	7 SPA. @ ABOUT 4'-1(-)	8 SPA. @ ABOUT 3'-7(-)	② 9 SPA. @ 3'-2	③ 10 SPA. @ ABOUT 2'-10(+)	③ 11 SPA. @ ABOUT 2'-7(+)	③ 11 SPA. @ ABOUT 2'-7(+)	③ 11 SPA. @ ABOUT 2'-7(+)
TYP. PILE SPACES @ 15°	6 SPA. @ ABOUT 4'-11(+)	6 SPA. @ ABOUT 4'-11(+)	7 SPA. @ ABOUT 4'-3(-)	8 SPA. @ ABOUT 3'-8(+)	② 9 SPA. @ ABOUT 3'-3(+)	② 10 SPA. @ ABOUT 2'-11(+)	③ 11 SPA. @ ABOUT 2'-8(+)	③ 11 SPA. @ ABOUT 2'-8(+)	③ 11 SPA. @ ABOUT 2'-8(+)
TYP. PILE SPACES @ 30°	6 SPA. @ ABOUT 5'-6(-)	6 SPA. @ ABOUT 5'-6(-)	7 SPA. @ ABOUT 4'-8(+)	8 SPA. @ ABOUT 4'-1(+)	9 SPA. @ ABOUT 3'-8(-)	② 10 SPA. @ ABOUT 3'-3(+)	② 11 SPA. @ ABOUT 3'-0(-)	② 11 SPA. @ ABOUT 3'-0(-)	② 11 SPA. @ ABOUT 3'-0(-)
TYP. PILE SPACES @ 45°	6 SPA. @ ABOUT 6'-9(-)	6 SPA. @ ABOUT 6'-9(-)	7 SPA. @ ABOUT 5'-9(+)	8 SPA. @ ABOUT 5'-0(+)	9 SPA. @ ABOUT 4'-6(-)	10 SPA. @ ABOUT 4'-0(+)	11 SPA. @ ABOUT 3'-8(-)	11 SPA. @ ABOUT 3'-8(-)	11 SPA. @ ABOUT 3'-8(-)
④ PU, STRENGTH I DESIGN LOAD FOR PIER (KIPS)	631 KIPS	699 KIPS	776 KIPS	860 KIPS	942 KIPS	1039 KIPS	1134 KIPS	1234 KIPS	1346 KIPS

① THIS TYPICAL NUMBER OF PILES MAY NEED TO BE MODIFIED DEPENDING ON SELECTED PIOL PILE TYPE AND SIZE, HEIGHT, AND RESISTANCE. IF THE NUMBER OF PILES IS DIFFERENT THAN IN THE TABLE FOR THE BRIDGE LENGTH, THE NUMBER OF 5h1 BARS AND OTHER QUANTITIES NEED TO BE CHECKED AND ADJUSTED AS NEEDED. PILES 10 INCHES AND 12 INCHES IN SIZE MUST BE SPACED 2'-6 OR MORE, PILES 14 INCHES IN SIZE MUST BE SPACED 2'-11 OR MORE, AND PILES 16 INCHES IN SIZE MUST BE SPACED 3'-4 OR MORE.

② MAXIMUM PIOL PILE SIZE AT THIS SPACING IS 14 INCHES.

③ MAXIMUM PIOL PILE SIZE AT THIS SPACING IS 12 INCHES.

④ STRENGTH I PIER DESIGN LOAD INCLUDES DYNAMIC LOAD ALLOWANCE (IM), AND PIER CAP WEIGHT IS BASED ON 45° SKEW. USE THIS PU FOR DETERMINING NUMBER OF PILES AND PILE LENGTH.

PIER NOTES:

ALL MONOLITHIC PIER CAP REINFORCING AND CONCRETE IS INCLUDED IN SUPERSTRUCTURE ESTIMATE OF QUANTITIES.

THE MINIMUM CLEAR DISTANCE FROM THE FACE OF THE CONCRETE TO NEAR REINFORCING BAR IS TO BE 2" UNLESS OTHERWISE NOTED OR SHOWN.

THE PIER PILES ARE TO BE DRIVEN TO FULL PENETRATION, IF PRACTICABLE, BUT IN NO CASE TO A BEARING VALUE LESS THAN THE PILE BEARING REQUIRED FOR EACH BRIDGE LENGTH AS SHOWN ON THIS SHEET. ADDITIONAL DRIVING CAPACITY MAY BE REQUIRED THROUGH SCOURABLE LAYERS. REFER TO GENERAL PLAN NOTES FOR ADDITIONAL INFORMATION.

CAP STEEL AS DETAILED ON PIOL STANDARD PILE DRAWING IS REQUIRED FOR MONOLITHIC PIER CAPS.

THE CONCRETE QUANTITIES ARE BASED ON THE USE OF TYPE 3 PILING. IF TYPE 1 OR TYPE 2 IS USED, THE CONCRETE QUANTITIES MAY BE ADJUSTED TO ACCOUNT FOR THE CONCRETE DISPLACED BY THE PILING.

ALL REINFORCING STEEL IS TO BE GRADE 60.

PIER PILING WAS DESIGNED FOR HL-93 LOADING WITH AN ALLOWANCE FOR 20 LBS. PER SQ. FT. FUTURE WEARING SURFACE.

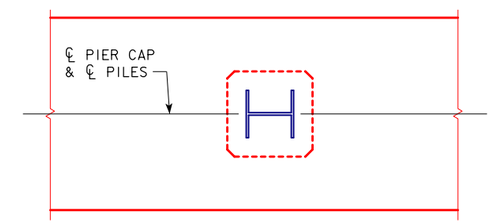

PILE ORIENTATION DETAIL FOR TYPE 3 TRESTLE BENT PILES

09-2020
LATEST REVISION DATE

APPROVED BY BRIDGE ENGINEER

IOWA DOT Highway Division

STANDARD DESIGN - 30' ROADWAY, 3 SPAN BRIDGES

CONTINUOUS CONCRETE SLAB BRIDGES

NOVEMBER, 2006

MONOLITHIC PIER CAP DETAILS ALL BRIDGES

SHEET 1 OF 2

J30-23-06

REVISED 05-2014: CHANGED THE BAR LABEL FROM 5d1 TO 5h1 IN ENCIRCLED NOTE 1.
REVISED 09-2020: UPDATED BRIDGE ENGINEER SIGNATURE.

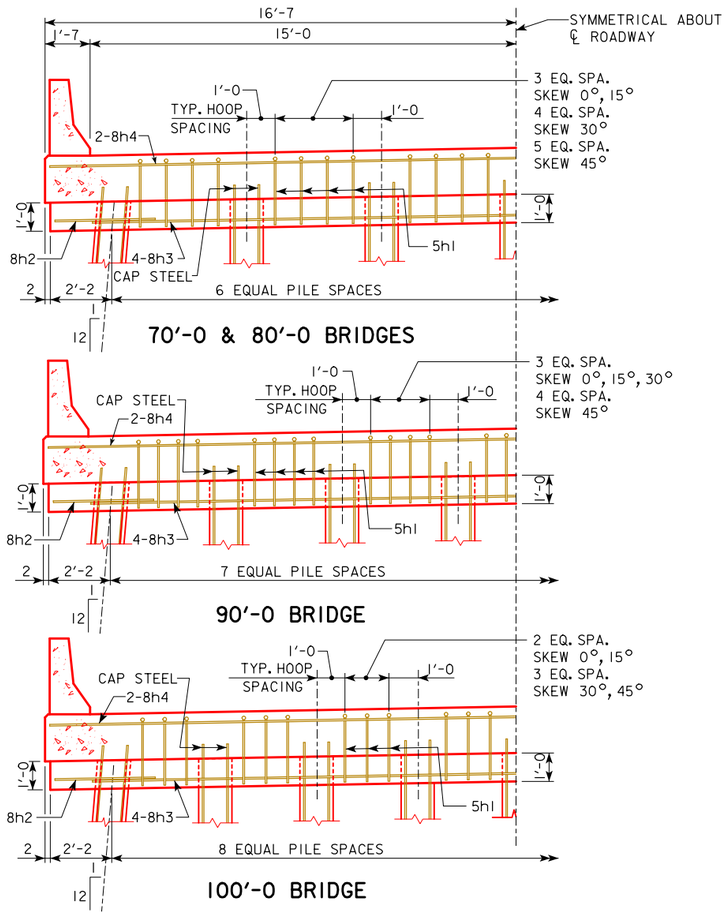

HALF SECTION NEAR PIER

SHOWING STIRRUP SPACING AND NUMBER OF PILING

NOTE: BOTTOM OF CAP ELEVATIONS WILL BE REQUIRED AT THE ℄ OF ROADWAY AND AT EACH EXTERIOR PILE.

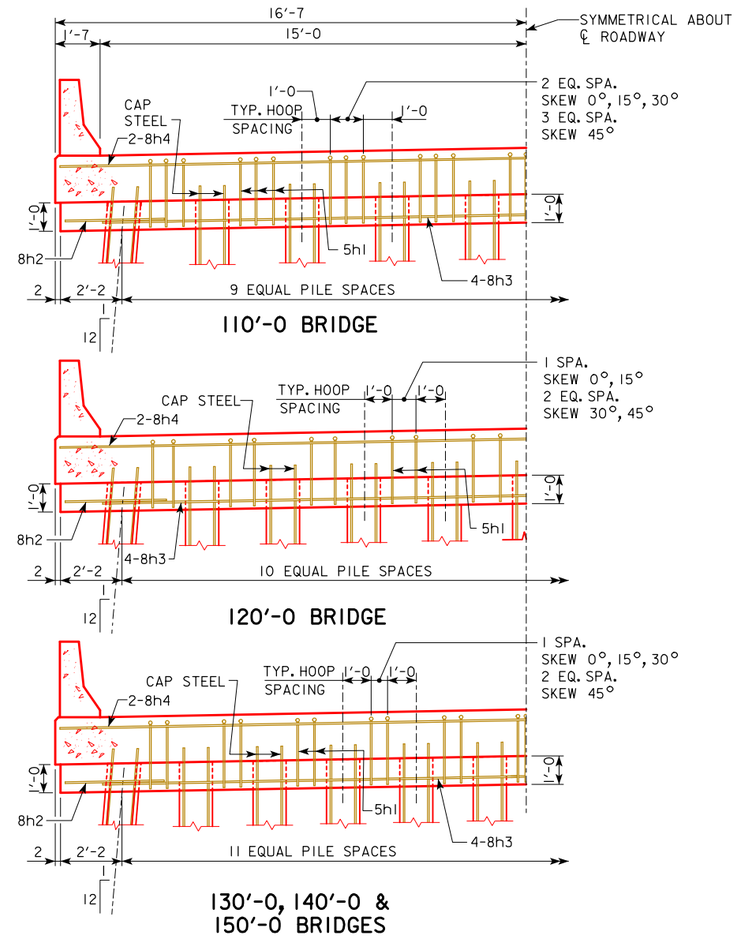

HALF SECTION NEAR PIER

SHOWING STIRRUP SPACING AND NUMBER OF PILING

NOTE: BOTTOM OF CAP ELEVATIONS WILL BE REQUIRED AT THE ℄ OF ROADWAY AND AT EACH EXTERIOR PILE.

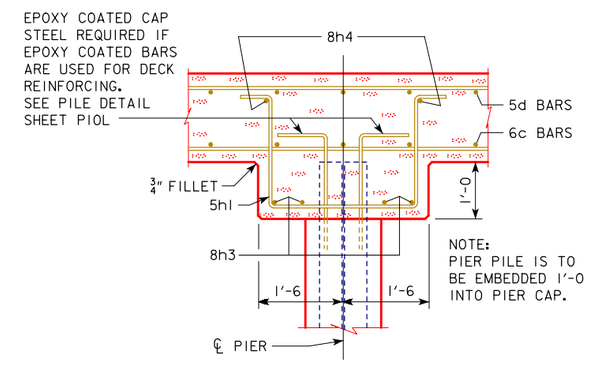

TYPICAL CAP SECTION

REVISED 07-2009: CHANGED THE DRAIN ANGLES DETAILS ON SECTION A-A.
REVISED 09-2020: UPDATED BRIDGE ENGINEER SIGNATURE.

09-2020
LATEST REVISION DATE

APPROVED BY BRIDGE ENGINEER

IOWA DOT Highway Division

STANDARD DESIGN - 30' ROADWAY, 3 SPAN BRIDGES

CONTINUOUS CONCRETE SLAB BRIDGES

NOVEMBER, 2006

MONOLITHIC PIER CAP DETAILS
ALL BRIDGES

SHEET 2 OF 2

J30-24-06

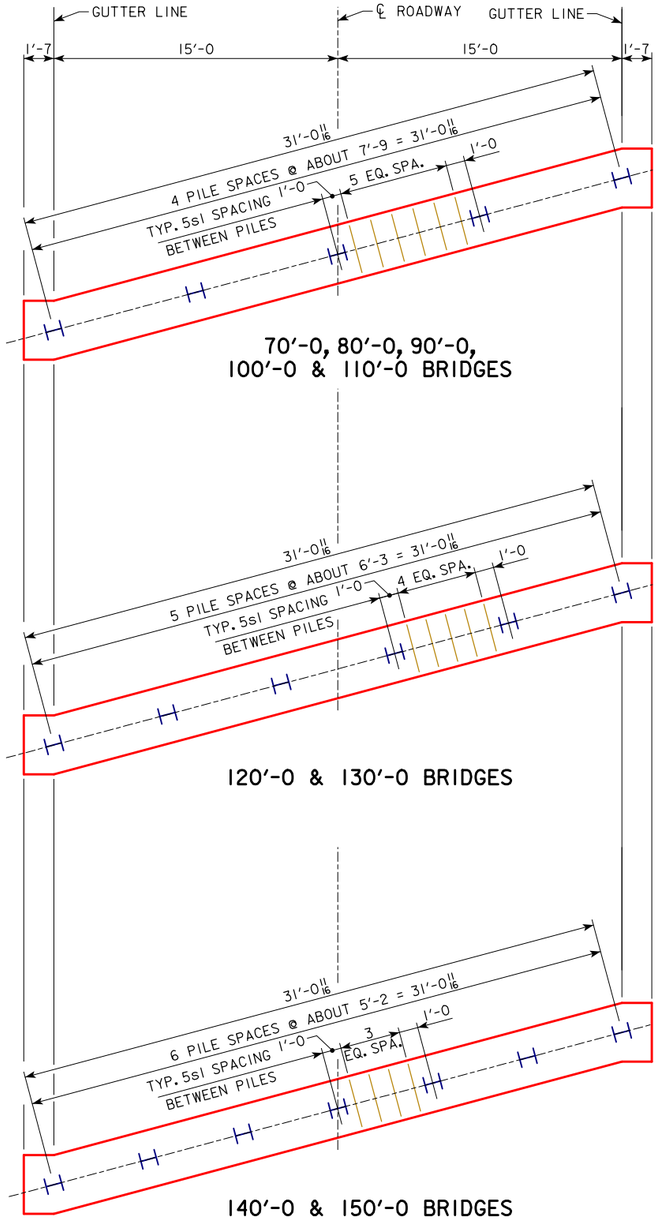

PILE PLAN - 15° SKEW
STEEL PILING

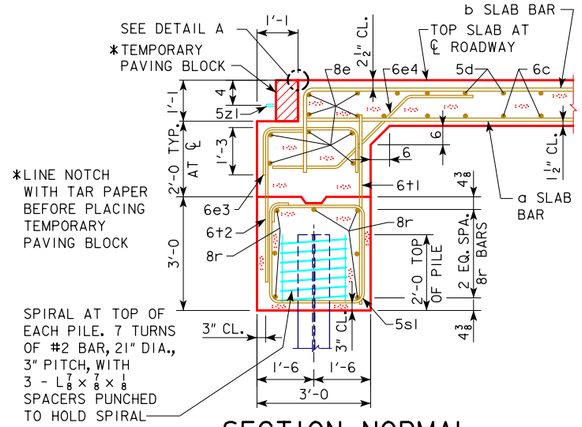

SECTION NORMAL
TO ABUTMENT AT ℄

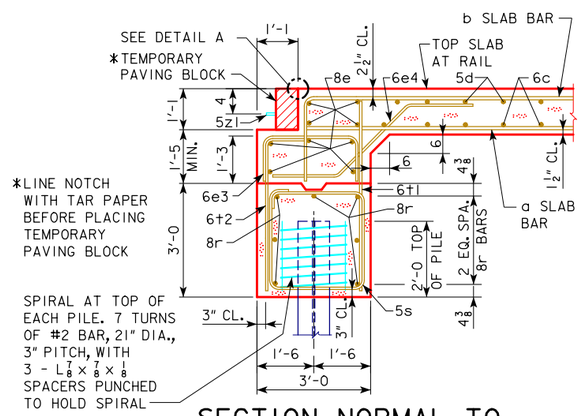

SECTION NORMAL TO
ABUTMENT AT GUTTERLINE

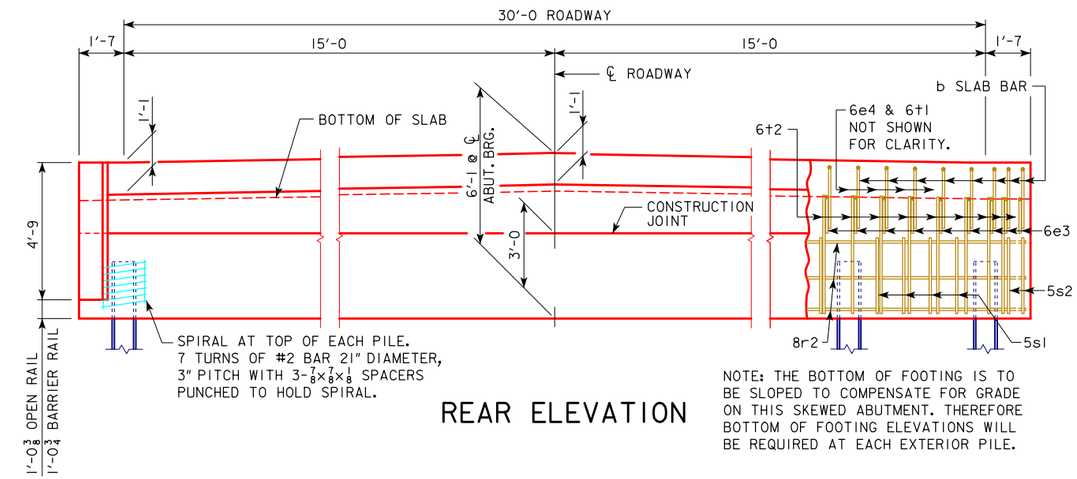

REAR ELEVATION

NOTE: THE BOTTOM OF FOOTING IS TO BE SLOPED TO COMPENSATE FOR GRADE ON THIS SKEWED ABUTMENT. THEREFORE BOTTOM OF FOOTING ELEVATIONS WILL BE REQUIRED AT EACH EXTERIOR PILE.

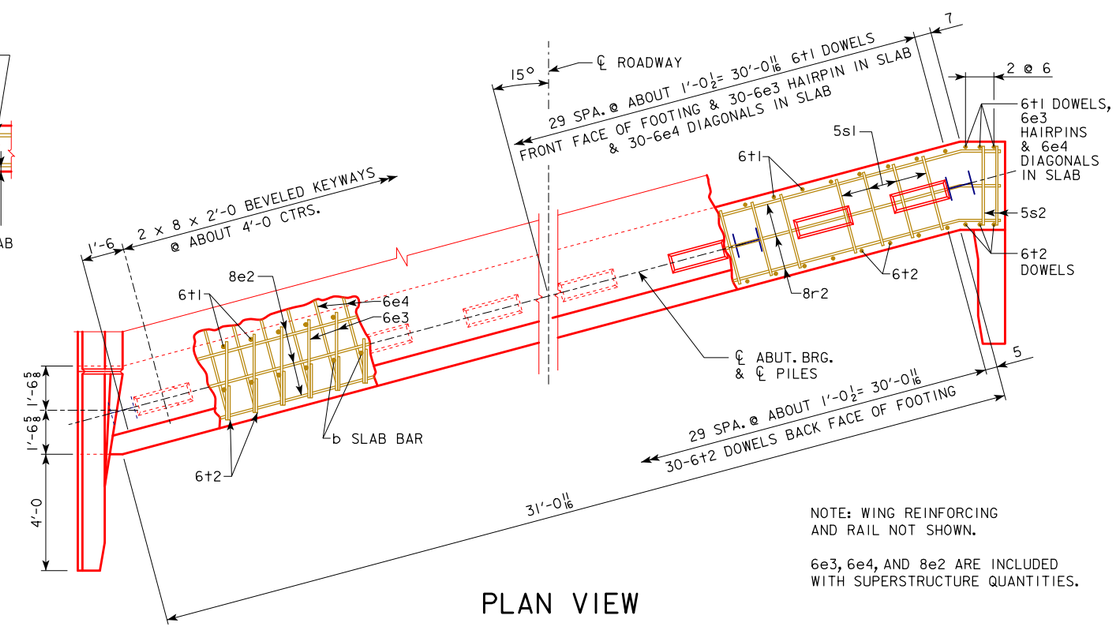

PLAN VIEW

NOTE: WING REINFORCING AND RAIL NOT SHOWN.

6e3, 6e4, AND 8e2 ARE INCLUDED WITH SUPERSTRUCTURE QUANTITIES.

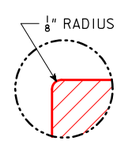

DETAIL A

ABUTMENT NOTES:

ALL PILING HP 10x42.

THE CONCRETE AND REINFORCING STEEL FOR THE WINGS IS INCLUDED WITH THE SUPERSTRUCTURE.

DETAILS ON THIS SHEET ARE TO BE USED ONLY WHEN ABUTMENTS ARE PLACED ON STEEL PILES. IF ROCK IS ENCOUNTERED CLOSER THAN 12'-0 BELOW ABUTMENT FOOTING, SPECIAL ANALYSIS MAY BE REQUIRED.

THE MINIMUM CLEAR DISTANCE FROM THE FACE OF THE CONCRETE TO NEAR REINFORCING BAR IS TO BE 2 INCHES UNLESS OTHERWISE NOTED OR SHOWN.

STEEL ABUTMENT PILES SHALL BE DRIVEN TO FULL PENETRATION IF PRACTICABLE BUT IN NO CASE TO A BEARING VALUE LESS THAN SHOWN IN DESIGN PLANS.

ALL REINFORCING STEEL IS TO BE GRADE 60.

ABUTMENT PILING WAS DESIGNED FOR HL-93 LOADING WITH AN ALLOWANCE FOR 20 LBS. PER SQ. FT. FUTURE WEARING SURFACE.

NUMBER OF PILES AND ABUTMENT DESIGN LOADS

BRIDGE LENGTH	70'-0	80'-0	90'-0	100'-0	110'-0	120'-0	130'-0	140'-0	150'-0
PILING - NUMBER	5	5	5	5	5	6	6	7	7
PU, STRENGTH I DESIGN LOAD - KIPS	381	406	429	460	489	522	555	Δ 650	Δ 688

Δ INCLUDES DYNAMIC LOAD ALLOWANCE
NOTE: PU, STRENGTH I DESIGN LOAD (KIPS) IS NOT THE VALUE USED IN THE FIELD FOR DRIVING PILES.

09-2020
LATEST REVISION DATE

APPROVED BY BRIDGE ENGINEER

IOWA DOT Highway Division

STANDARD DESIGN - 30' ROADWAY, 3 SPAN BRIDGES
CONTINUOUS CONCRETE SLAB BRIDGES
NOVEMBER, 2006

ABUTMENT DETAILS
15° SKEW - STEEL PILING

J30-35-06

REVISED 10-2013: REVISION FOR LRFD PILE DESIGN PU, STRENGTH LOADS IN TABLE.
REVISED 09-2020: UPDATED BRIDGE ENGINEER SIGNATURE. CHANGED PAVING BLOCK LIFTING HOOP BAR MARK, (WAS 5x1).

BILL OF REINFORCING STEEL - ONE ABUTMENT - 0° SKEW

	BRIDGE LENGTH			70'-0		80'-0		90'-0		100'-0		110'-0		120'-0		130'-0		140'-0		150'-0	
MARK	LOCATION	SHAPE	LENGTH	NO.	WEIGHT	NO.	WEIGHT	NO.	WEIGHT	NO.	WEIGHT	NO.	WEIGHT	NO.	WEIGHT	NO.	WEIGHT	NO.	WEIGHT	NO.	WEIGHT
8r1	ABUTMENT FOOTING LONGITUDINAL		32'-10	7	614	7	614	7	614	7	614	7	614	7	614	7	614	7	614	7	614
5s1	ABUTMENT FOOTING HOOPS		11'-0	28	321	28	321	28	321	28	321	28	321	29	333	29	333	28	321	28	321
6t1	FOOTING TO SLAB DOWELS		5'-0	36	270	36	270	36	270	36	270	36	270	36	270	36	270	36	270	36	270
6t2	FOOTING TO SLAB DOWELS		5'-7	36	302	36	302	36	302	36	302	36	302	36	302	36	302	36	302	36	302
#2	PILE SPIRAL		38'-6	5	32	5	32	5	32	5	32	5	32	6	39	6	39	7	45	7	45
	SPIRAL SPACERS - L $\frac{7}{8}$ X $\frac{7}{8}$ X $\frac{1}{8}$ X 0.70		1'-10	15	19	15	19	15	19	15	19	15	19	18	23	18	23	21	27	21	27
	REINFORCING STEEL - TOTAL (LBS.)				1558		1558		1558		1558		1558		1581		1581		1579		1579

BILL OF REINFORCING STEEL - ONE ABUTMENT - 15° SKEW

	BRIDGE LENGTH			70'-0		80'-0		90'-0		100'-0		110'-0		120'-0		130'-0		140'-0		150'-0	
MARK	LOCATION	SHAPE	LENGTH	NO.	WEIGHT	NO.	WEIGHT	NO.	WEIGHT	NO.	WEIGHT	NO.	WEIGHT	NO.	WEIGHT	NO.	WEIGHT	NO.	WEIGHT	NO.	WEIGHT
8r2	ABUTMENT FOOTING LONGITUDINAL		33'-11	7	634	7	634	7	634	7	634	7	634	7	634	7	634	7	634	7	634
5s1	ABUTMENT FOOTING HOOPS		11'-0	24	275	24	275	24	275	24	275	24	275	25	287	25	287	24	275	24	275
5s2	ABUTMENT FOOTING HOOPS		11'-3	4	47	4	47	4	47	4	47	4	47	4	47	4	47	4	47	4	47
6t1	FOOTING TO SLAB DOWELS		5'-0	36	270	36	270	36	270	36	270	36	270	36	270	36	270	36	270	36	270
6t2	FOOTING TO SLAB DOWELS		5'-7	36	302	36	302	36	302	36	302	36	302	36	302	36	302	36	302	36	302
#2	PILE SPIRAL		38'-6	5	32	5	32	5	32	5	32	5	32	6	39	6	39	7	45	7	45
	SPIRAL SPACERS - L $\frac{7}{8}$ X $\frac{7}{8}$ X $\frac{1}{8}$ X 0.70		1'-10	15	19	15	19	15	19	15	19	15	19	18	23	18	23	21	27	21	27
	REINFORCING STEEL - TOTAL (LBS.)				1579		1579		1579		1579		1579		1602		1602		1600		1600

BILL OF REINFORCING STEEL - ONE ABUTMENT - 30° SKEW

	BRIDGE LENGTH			70'-0		80'-0		90'-0		100'-0		110'-0		120'-0		130'-0		140'-0		150'-0	
MARK	LOCATION	SHAPE	LENGTH	NO.	WEIGHT	NO.	WEIGHT	NO.	WEIGHT	NO.	WEIGHT	NO.	WEIGHT	NO.	WEIGHT	NO.	WEIGHT	NO.	WEIGHT	NO.	WEIGHT
8r2	ABUTMENT FOOTING LONGITUDINAL		37'-6	7	701	7	701	7	701	7	701	7	701	7	701	7	701	7	701	7	701
5s1	ABUTMENT FOOTING HOOPS		11'-0	30	344	30	344	30	344	30	344	30	344	30	344	30	344	30	344	30	344
5s2	ABUTMENT FOOTING HOOPS		11'-11	4	50	4	50	4	50	4	50	4	50	4	50	4	50	4	50	4	50
6t1	FOOTING TO SLAB DOWELS		5'-0	36	270	36	270	36	270	36	270	36	270	36	270	36	270	36	270	36	270
6t2	FOOTING TO SLAB DOWELS		5'-7	36	302	36	302	36	302	36	302	36	302	36	302	36	302	36	302	36	302
#2	PILE SPIRAL		38'-6	6	39	6	39	6	39	6	39	6	39	6	39	6	39	7	45	7	45
	SPIRAL SPACERS - L $\frac{7}{8}$ X $\frac{7}{8}$ X $\frac{1}{8}$ X 0.70		1'-10	18	23	18	23	18	23	18	23	18	23	18	23	18	23	21	27	21	27
	REINFORCING STEEL - TOTAL (LBS.)				1729		1729		1729		1729		1729		1729		1729		1739		1739

BILL OF REINFORCING STEEL - ONE ABUTMENT - 45° SKEW

	BRIDGE LENGTH			70'-0		80'-0		90'-0		100'-0		110'-0		120'-0		130'-0		140'-0		150'-0	
MARK	LOCATION	SHAPE	LENGTH	NO.	WEIGHT	NO.	WEIGHT	NO.	WEIGHT	NO.	WEIGHT	NO.	WEIGHT	NO.	WEIGHT	NO.	WEIGHT	NO.	WEIGHT	NO.	WEIGHT
8r2	ABUTMENT FOOTING LONGITUDINAL		45'-3	7	846	7	846	7	846	7	846	7	846	7	846	7	846	7	846	7	846
5s1	ABUTMENT FOOTING HOOPS		11'-0	42	482	42	482	42	482	42	482	42	482	42	482	42	482	42	482	42	482
5s2	ABUTMENT FOOTING HOOPS		13'-6	4	56	4	56	4	56	4	56	4	56	4	56	4	56	4	56	4	56
6t1	FOOTING TO SLAB DOWELS		5'-0	36	270	36	270	36	270	36	270	36	270	36	270	36	270	36	270	36	270
6t2	FOOTING TO SLAB DOWELS		5'-7	36	302	36	302	36	302	36	302	36	302	36	302	36	302	36	302	36	302
#2	PILE SPIRAL		38'-6	7	45	7	45	7	45	7	45	7	45	7	45	7	45	7	45	8	51
	SPIRAL SPACERS - L $\frac{7}{8}$ X $\frac{7}{8}$ X $\frac{1}{8}$ X 0.70		1'-10	21	27	21	27	21	27	21	27	21	27	21	27	21	27	21	27	24	31
	REINFORCING STEEL - TOTAL (LBS.)				2028		2028		2028		2028		2028		2028		2028		2028		2038

NOTE: THE PILE SPIRALS AND SPIRAL SPACERS ARE TO BE NON-COATED REINFORCING BUT MAY BE EPOXY COATED AT THE CONTRACTORS OPTION AND EXPENSE.

ESTIMATED QUANTITIES - ONE ABUT. - 0° SKEW

LOCATION	UNIT	QUANTITY								
BRIDGE LENGTH		70'-0	80'-0	90'-0	100'-0	110'-0	120'-0	130'-0	140'-0	150'-0
STRUCTURAL CONCRETE (BRIDGE)	C.Y.	11.1	11.1	11.1	11.1	11.1	11.1	11.1	11.1	11.1
REINFORCING STEEL	LBS.	1558	1558	1558	1558	1558	1581	1581	1579	1579
STEEL PILING HP 10x42	NO.	5	5	5	5	5	6	6	7	7
PREBORE HOLES	FT.	-	-	-	-	-	-	-	70	70

ESTIMATED QUANTITIES - ONE ABUT. - 15° SKEW

LOCATION	UNIT	QUANTITY								
BRIDGE LENGTH		70'-0	80'-0	90'-0	100'-0	110'-0	120'-0	130'-0	140'-0	150'-0
STRUCTURAL CONCRETE (BRIDGE)	C.Y.	11.5	11.5	11.5	11.5	11.5	11.5	11.5	11.5	11.5
REINFORCING STEEL	LBS.	1579	1579	1579	1579	1579	1602	1602	1600	1600
STEEL PILING HP 10x42	NO.	5	5	5	5	5	6	6	7	7
PREBORE HOLES	FT.	-	-	-	-	-	-	-	70	70

ESTIMATED QUANTITIES - ONE ABUT. - 30° SKEW

LOCATION	UNIT	QUANTITY								
BRIDGE LENGTH		70'-0	80'-0	90'-0	100'-0	110'-0	120'-0	130'-0	140'-0	150'-0
STRUCTURAL CONCRETE (BRIDGE)	C.Y.	12.8	12.8	12.8	12.8	12.8	12.8	12.8	12.8	12.8
REINFORCING STEEL	LBS.	1729	1729	1729	1729	1729	1729	1729	1739	1739
STEEL PILING HP 10x42	NO.	6	6	6	6	6	6	6	7	7
PREBORE HOLES	FT.	-	-	-	-	-	-	-	70	70

ESTIMATED QUANTITIES - ONE ABUT. - 45° SKEW

LOCATION	UNIT	QUANTITY								
BRIDGE LENGTH		70'-0	80'-0	90'-0	100'-0	110'-0	120'-0	130'-0	140'-0	150'-0
STRUCTURAL CONCRETE (BRIDGE)	C.Y.	15.7	15.7	15.7	15.7	15.7	15.7	15.7	15.7	15.7
REINFORCING STEEL	LBS.	2028	2028	2028	2028	2028	2028	2028	2028	2038
STEEL PILING HP 10x42	NO.	7	7	7	7	7	7	7	7	8
PREBORE HOLES	FT.	-	-	-	-	-	-	-	70	80

BENT BAR DETAILS

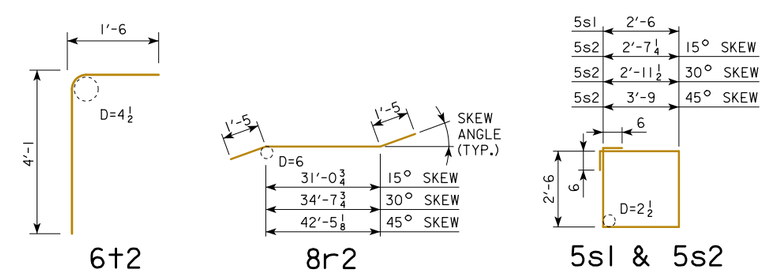

NOTE: DIMENSIONS ARE OUT TO OUT. D = PIN DIAMETER.

REVISED 07-2009: CONCRETE QUANTITIES CHANGED.
REVISED 09-2020: UPDATED BRIDGE ENGINEER SIGNATURE.

09-2020
LATEST REVISION DATE

APPROVED BY BRIDGE ENGINEER

IOWA DOT Highway Division

STANDARD DESIGN - 30' ROADWAY, 3 SPAN BRIDGES

CONTINUOUS CONCRETE SLAB BRIDGES

NOVEMBER, 2006

ABUTMENT DETAILS
STEEL PILING

J30-39-06

TABLE OF OPEN RAIL DIMENSIONS AND NUMBERS

℄-℄ ABUT. BRG		70′-0				80′-0				90′-0				100′-0			
SKEW		0°	15°	30°	45°	0°	15°	30°	45°	0°	15°	30°	45°	0°	15°	30°	45°
DIMENSION OR NUMBER	A (FT.-IN.)	81′-0	81′-1 1/4	81′-5 1/2	82′-3	91′-0	91′-1 1/4	91′-5 1/2	92′-3	101′-0	101′-1 1/4	101′-5 1/2	102′-3	111′-0	111′-1 1/4	111′-5 1/2	112′-3
	B (FT.-IN.)	67′-0	67′-1 1/4	67′-5 1/2	68′-3	77′-0	77′-1 1/4	77′-5 1/2	78′-3	87′-0	87′-1 1/4	87′-5 1/2	88′-3	97′-0	97′-1 1/4	97′-5 1/2	98′-3
	C	8	8	8	8	10	10	10	10	11	11	11	11	12	12	12	12
	D (FT.-IN.)	7′-10 1/2	7′-10 11/16	7′-11 3/16	7′-11 7/8	7′-3 5/8	7′-3 3/4	7′-4 3/16	7′-4 11/16	7′-6 9/16	7′-6 11/16	7′-7 1/16	7′-7 9/16	7′-9	7′-9 1/8	7′-9 7/16	7′-9 15/16

℄-℄ ABUT. BRG		110′-0				120′-0				130′-0				140′-0				150′-0			
SKEW		0°	15°	30°	45°	0°	15°	30°	45°	0°	15°	30°	45°	0°	15°	30°	45°	0°	15°	30°	45°
DIMENSION OR NUMBER	A (FT.-IN.)	121′-0	121′-1 1/4	121′-5 1/2	122′-3	131′-0	131′-1 1/4	131′-5 1/2	132′-3	141′-0	141′-1 1/4	141′-5 1/2	142′-3	151′-0	151′-1 1/4	151′-5 1/2	152′-3	161′-0	161′-1 1/4	161′-5 1/2	162′-3
	B (FT.-IN.)	107′-0	107′-1 1/4	107′-5 1/2	108′-3	117′-0	117′-1 1/4	117′-5 1/2	118′-3	127′-0	127′-1 1/4	127′-5 1/2	128′-3	137′-0	137′-1 1/4	137′-5 1/2	138′-3	147′-0	147′-1 1/4	147′-5 1/2	148′-3
	C	13	13	13	13	15	15	15	15	16	16	16	16	17	17	17	17	18	18	18	18
	D (FT.-IN.)	7′-11 1/16	7′-11 3/16	7′-11 1/2	7′-11 15/16	7′-6 3/8	7′-6 1/2	7′-6 3/4	7′-7 1/8	7′-8 1/4	7′-8 5/16	7′-8 5/8	7′-8 15/16	7′-9 7/8	7′-9 15/16	7′-10 3/16	7′-10 1/2	7′-11 5/16	7′-11 3/8	7′-11 5/8	7′-11 15/16

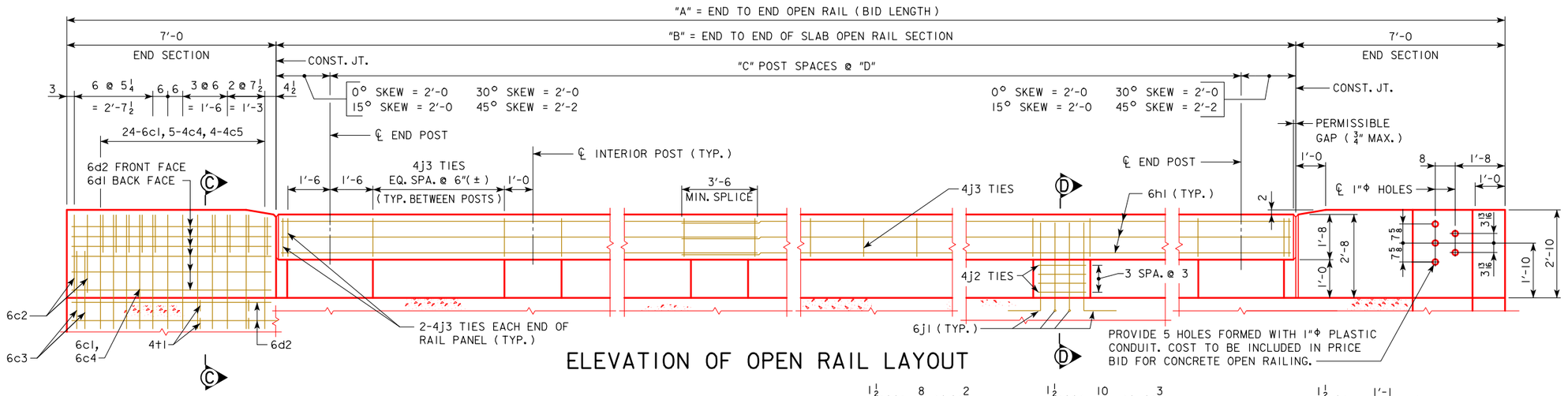

ELEVATION OF OPEN RAIL LAYOUT

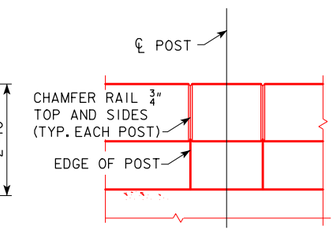

RAIL CHAMFER DETAIL

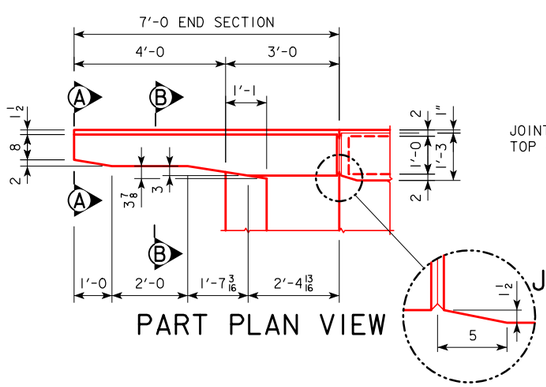

PART PLAN VIEW

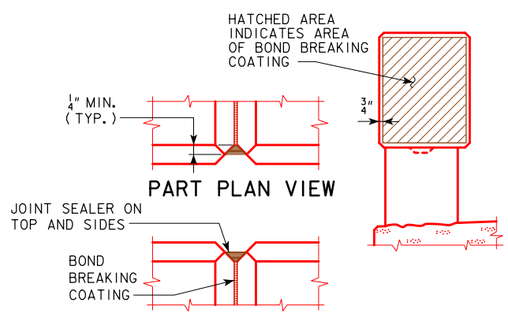

PART PLAN VIEW

PART ELEVATION VIEW

JOINT DETAILS AT END SECTION

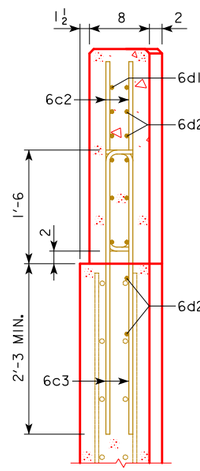

SECTION A-A

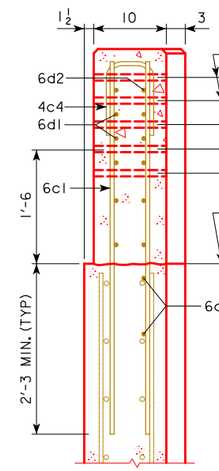

SECTION B-B

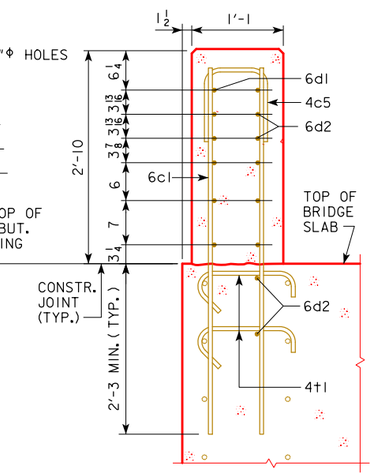

SECTION C-C

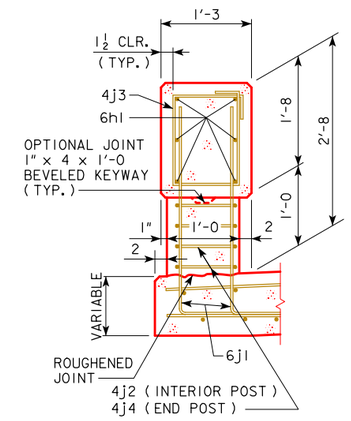

PART SECTION D-D

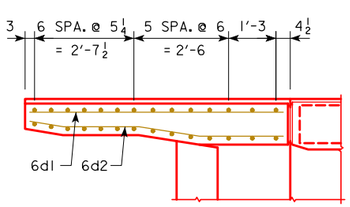

PART PLAN SECTION

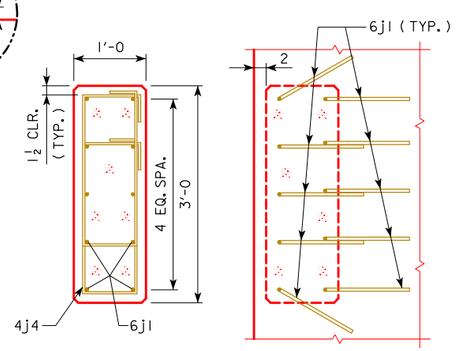

END POST DETAILS (REQUIRED AT ENDS OF OPEN RAIL)

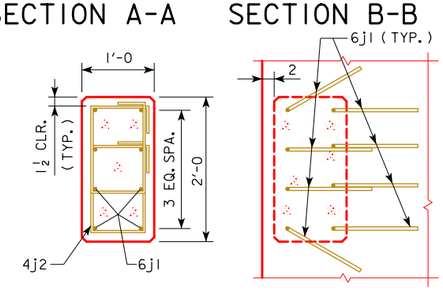

INTERIOR POST DETAILS

09-2020
LATEST REVISION DATE

APPROVED BY BRIDGE ENGINEER

IOWA DOT Highway Division

STANDARD DESIGN - 30′ ROADWAY, 3 SPAN BRIDGES

CONTINUOUS CONCRETE SLAB BRIDGES

NOVEMBER, 2006

OPEN RAIL DETAILS (TL-4)

J30-43-06

REVISED 12-2008: REVISED END SECTION SHAPE AND REINFORCEMENT. RAIL DEPTH CHANGED TO 1′-8.
REVISED 09-2020: UPDATED BRIDGE ENGINEER SIGNATURE. CHANGED SECTION A-A (WAS VIEW A-A).

EPOXY REINFORCING STEEL-TWO OPEN RAILS

BRIDGE LENGTH			70'-0			80'-0			90'-0			100'-0			110'-0			120'-0			130'-0			140'-0			150'-0		
BAR	LOCATION	SHAPE	NO.	LENGTH	WEIGHT	NO.	LENGTH	WEIGHT	NO.	LENGTH	WEIGHT	NO.	LENGTH	WEIGHT	NO.	LENGTH	WEIGHT	NO.	LENGTH	WEIGHT	NO.	LENGTH	WEIGHT	NO.	LENGTH	WEIGHT	NO.	LENGTH	WEIGHT
6c1	VERTICAL		96	4'-11	709	96	4'-11	709	96	4'-11	709	96	4'-11	709	96	4'-11	709	96	4'-11	709	96	4'-11	709	96	4'-11	709	96	4'-11	709
6c2	VERTICAL		16	2'-10	68	16	2'-10	68	16	2'-10	68	16	2'-10	68	16	2'-10	68	16	2'-10	68	16	2'-10	68	16	2'-10	68	16	2'-10	68
6c3	VERTICAL		16	4'-1	98	16	4'-1	98	16	4'-1	98	16	4'-1	98	16	4'-1	98	16	4'-1	98	16	4'-1	98	16	4'-1	98	16	4'-1	98
4c4	VERTICAL HOOPS		20	2'-10	38	20	2'-10	38	20	2'-10	38	20	2'-10	38	20	2'-10	38	20	2'-10	38	20	2'-10	38	20	2'-10	38	20	2'-10	38
4c5	VERTICAL HOOPS		16	3'-1	33	16	3'-1	33	16	3'-1	33	16	3'-1	33	16	3'-1	33	16	3'-1	33	16	3'-1	33	16	3'-1	33	16	3'-1	33
6d1	HORIZONTAL		24	6'-8	240	24	6'-8	240	24	6'-8	240	24	6'-8	240	24	6'-8	240	24	6'-8	240	24	6'-8	240	24	6'-8	240	24	6'-8	240
6d2	HORIZONTAL		32	6'-9	324	32	6'-9	324	32	6'-9	324	32	6'-9	324	32	6'-9	324	32	6'-9	324	32	6'-9	324	32	6'-9	324	32	6'-9	324
6h1	LONGITUDINAL OPEN RAIL		24	35'-9	1289	36	28'-4	1532	36	31'-8	1712	36	35'-0	1893	36	38'-4	2073	48	32'-2	2319	48	34'-8	2499	48	37'-2	2680	60	32'-5	2921
6j1	VERTICAL DOWELS OPEN RAIL		152	4'-6	1027	184	4'-7	1267	200	4'-8	1402	216	4'-9	1541	232	4'-10	1684	264	4'-11	1950	280	5'-1	2138	296	5'-2	2297	312	5'-3	2460
4j2	HOOPS INTERIOR POSTS		112	4'-8	349	144	4'-8	449	160	4'-8	499	176	4'-8	549	192	4'-8	599	224	4'-8	698	240	4'-8	748	256	4'-8	798	272	4'-8	848
4j3	HOOPS OPEN RAIL		212	5'-5	767	244	5'-5	883	290	5'-5	1049	316	5'-5	1143	342	5'-5	1237	394	5'-5	1426	420	5'-5	1520	446	5'-5	1614	472	5'-5	1708
4j4	HOOPS END POSTS		32	6'-5	137	32	6'-5	137	32	6'-5	137	32	6'-5	137	32	6'-5	137	32	6'-5	137	32	6'-5	137	32	6'-5	137	32	6'-5	137
4t1	WING FOOTING TIE BARS		16	VARIES	21	16	VARIES	21	16	VARIES	21	16	VARIES	21	16	VARIES	21	16	VARIES	21	16	VARIES	21	16	VARIES	21	16	VARIES	21
(INCLUDE WITH SUPERSTRUCTURE REINFORCING)		TOTAL (LBS.)			5100			5799			6330			6794			7261			8061			8573			9057			9605

REINFORCING QUANTITIES SHOWN ARE BASED ON 45° SKEW BID LENGTHS.

BENT BAR DETAILS

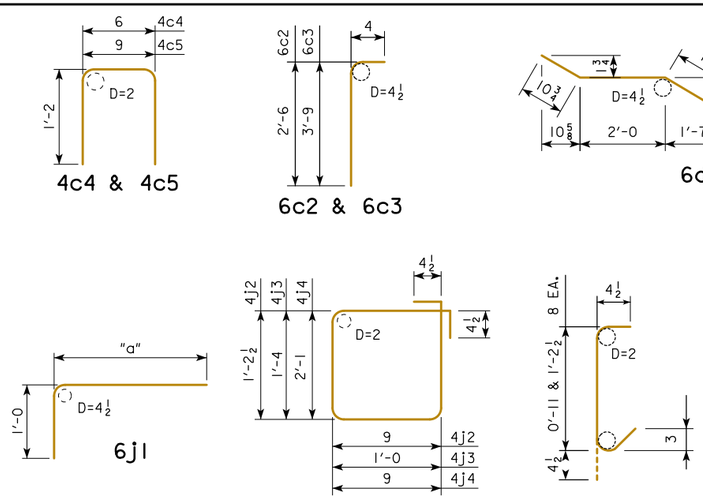

NOTE: ALL DIMENSIONS ARE OUT TO OUT.
D = PIN DIAMETER

6j1 BARS		
BRIDGE	"a"	LENGTH
70'	3'-6	4'-6
80'	3'-7	4'-7
90'	3'-8	4'-8
100'	3'-9	4'-9
110'	3'-10	4'-10
120'	3'-11	4'-11
130'	4'-1	5'-1
140'	4'-2	5'-2
150'	4'-3	5'-3

CONCRETE PLACEMENT QUANTITIES

NOTE: THESE VALUES TO BE USED FOR ALL SKEWS.

BRIDGE LENGTH	70'-0	80'-0	90'-0	100'-0	110'-0	120'-0	130'-0	140'-0	150'-0
*STANDARD SECTION CU. YDS.	12.2	14.0	15.7	17.4	19.1	21.0	22.7	24.4	26.0
END SECTION 4 @ 0.687 CU. YDS.	2.8	2.8	2.8	2.8	2.8	2.8	2.8	2.8	2.8
TOTAL CU. YDS.	15.0	16.8	18.5	20.2	21.9	23.8	25.5	27.2	28.8

* CONCRETE QUANTITIES SHOWN ARE BASED ON 45° SKEW BID LENGTHS.

CONCRETE OPEN RAIL QUANTITIES

BRIDGE LENGTH		UNIT	70'-0	80'-0	90'-0	100'-0	110'-0	120'-0	130'-0	140'-0	150'-0
CONCRETE OPEN RAILING, TL-4	0° SKEW	L.F.	162.0	182.0	202.0	222.0	242.0	262.0	282.0	302.0	322.0
CONCRETE OPEN RAILING, TL-4	15° SKEW	L.F.	162.2	182.2	202.2	222.2	242.2	262.2	282.2	302.2	322.2
CONCRETE OPEN RAILING, TL-4	30° SKEW	L.F.	162.9	182.9	202.9	222.9	242.9	262.9	282.9	302.9	322.9
CONCRETE OPEN RAILING, TL-4	45° SKEW	L.F.	164.5	184.5	204.5	224.5	244.5	264.5	284.5	304.5	324.5

OPEN RAIL NOTES:

MINIMUM CLEAR DISTANCE FROM FACE OF CONCRETE TO NEAR REINFORCING BAR IS TO BE 2" UNLESS OTHERWISE NOTED OR SHOWN.

COST OF THE JOINT SEALER AND BOND BREAKER SHALL BE CONSIDERED INCIDENTAL TO OTHER CONSTRUCTION.

THE CONCRETE OPEN RAIL IS TO BE BID ON A LINEAL FOOT BASIS MEASURED FROM END TO END OF RAIL. THE NUMBER OF LINEAL FEET OF OPEN RAIL INSTALLED WILL BE PAID FOR AT THE CONTRACT PRICE PER LINEAL FOOT. PRICE BID FOR "CONCRETE OPEN RAILING, TL-4" SHALL BE FULL COMPENSATION FOR FURNISHING ALL MATERIAL, EXCLUDING REINFORCING STEEL, AND ALL OF THE EQUIPMENT AND LABOR REQUIRED TO CONSTRUCT THE RAIL IN ACCORDANCE WITH THESE PLANS AND CURRENT SPECIFICATIONS.

ALL OPEN RAIL CONCRETE IS TO BE CLASS C.

IF PLANS SPECIFY THAT THE REINFORCING STEEL IN THE SLAB BE EPOXY COATED, ALL OPEN RAIL REINFORCING STEEL SHALL ALSO BE EPOXY COATED. OTHERWISE THE OPEN RAIL REINFORCING SHALL NOT BE EPOXY COATED.

THE JOINT SEALER SHALL BE LIGHT GRAY NONSAG LATEX CAULKING SEALER MARKETED FOR OUTDOOR USE. NO TESTING OR CERTIFICATION IS REQUIRED.

TOP OF THE OPEN RAIL IS TO BE PARALLEL TO THEORETICAL ℄ GRADE.

IF CONDUIT IS REQUIRED IN THIS PLAN THE RIGID STEEL CONDUIT, JUNCTION BOXES AND FITTINGS INCLUDING LABOR AND ANY ADDITIONAL WORK TO DO THE INSTALLATION IS CONSIDERED INCIDENTAL TO THE COST OF THE RAILING.

REVISED 07-2009: NUMBER OF 6d1 & 6d2 BARS CHANGED AND IS REFLECTED IN THE WEIGHT CHANGE.
REVISED 07-2016: REMOVED OPEN RAIL NOTE STATING "ALL OPEN RAIL REINFORCING STEEL IS TO BE INCLUDED WITH THE SUPERSTRUCTURE REINFORCING STEEL."
REVISED 09-2020: UPDATED BRIDGE ENGINEER SIGNATURE.

09-2020
LATEST REVISION DATE

APPROVED BY BRIDGE ENGINEER

IOWADOT Highway Division

STANDARD DESIGN - 30' ROADWAY, 3 SPAN BRIDGES
CONTINUOUS CONCRETE SLAB BRIDGES
NOVEMBER, 2006

OPEN RAIL DETAILS (TL-4)

J30-44-06

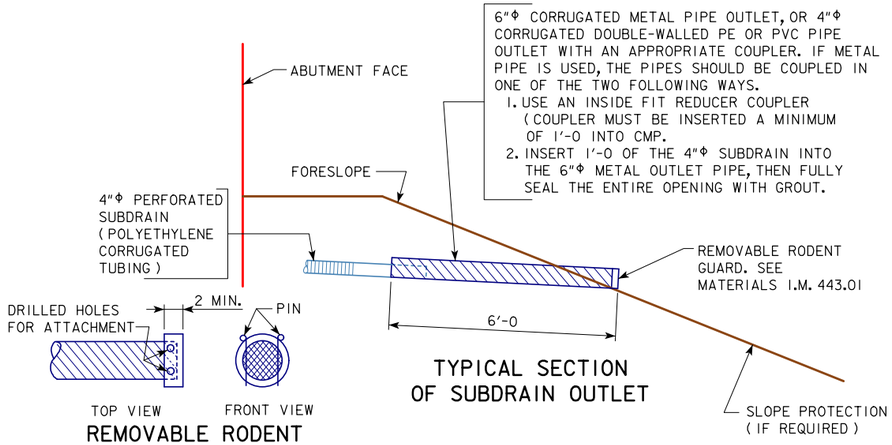

OUTLET DETAILS

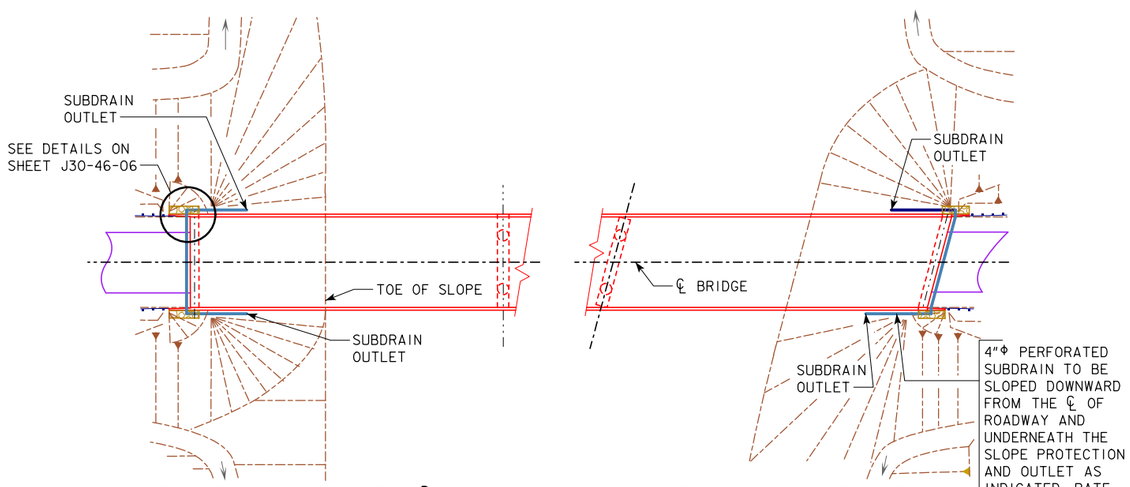

PROTECTION LAYOUT 0° SKEW

PROTECTION LAYOUT SKEWED

SITUATION PLAN

REFER TO SITUATION PLAN FOR NORTH ARROW.

REVISED 12-2008: REMOVED GRANULAR BACKFILL DETAILS.
REVISED 09-2020: UPDATED BRIDGE ENGINEER SIGNATURE.

09-2020
LATEST REVISION DATE

APPROVED BY BRIDGE ENGINEER

IOWA DOT Highway Division

STANDARD DESIGN - 30' ROADWAY, 3 SPAN BRIDGES

CONTINUOUS CONCRETE SLAB BRIDGES

NOVEMBER, 2006

SUBDRAIN DETAILS

J30-45-06

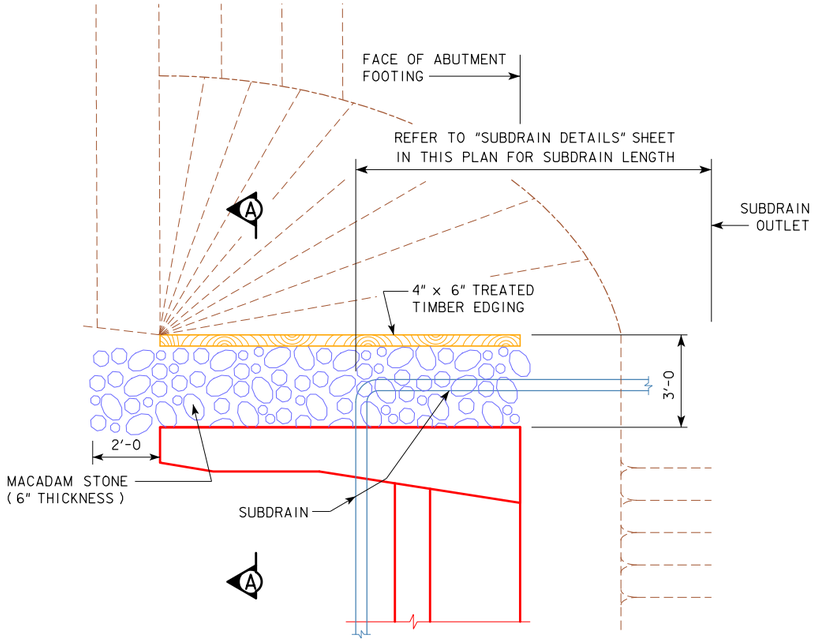

TOP VIEW OF WING ARMORING

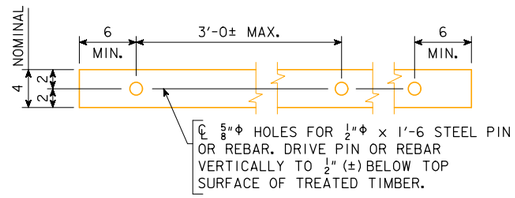

4" x 6" TREATED TIMBER EDGING DETAILS

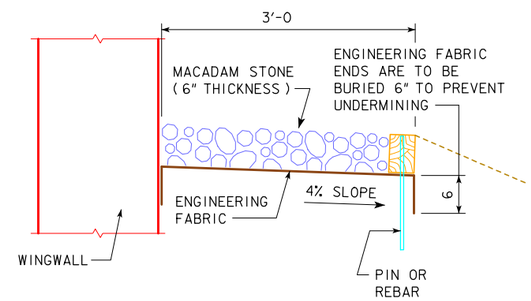

SECTION A-A

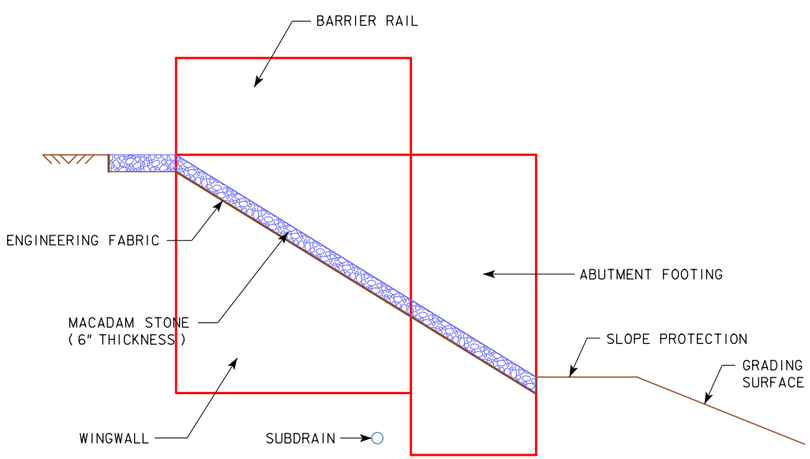

PROFILE VIEW OF WING ARMORING

SUBDRAIN NOTES:

SEE J30-45-06 AND "SITUATION PLAN" SHEETS FOR DETAILS OF PLACING ALL SUBDRAINS AND SUBDRAIN OUTLETS REQUIRED FOR THIS STRUCTURE.

THE BRIDGE CONTRACTOR IS TO INSTALL SUBDRAINS BEHIND THE ABUTMENT. THE SUBDRAINS SHALL BE 4" IN DIAMETER AND BE IN ACCORDANCE WITH ARTICLE 4143.01, B, OF THE STANDARD SPECIFICATIONS. THE SUBDRAIN OUTLET SHALL CONSIST OF A 6'-0 LENGTH OF PIPE WITH A REMOVABLE RODENT GUARD.

THE DIMENSIONS SHOWN FOR THE PROPOSED SUBDRAINS ARE BASED ON THE PROPOSED GRADING LAYOUT OF BRIDGE BERMS. THE DIMENSIONS SHOWN ARE FOR ESTIMATING ONLY. REQUIRED LENGTHS AND GENERAL LOCATIONS OF SUBDRAINS ARE SUBJECT TO CHANGE DUE TO FIELD ADJUSTMENTS OF THE GRADING LAYOUT.

THE COST OF FURNISHING AND PLACING SUBDRAIN (INCLUDING EXCAVATION), GRANULAR BACKFILL, POROUS BACKFILL, AND SUBDRAIN OUTLET IS TO BE INCLUDED IN THE PRICE BID FOR "STRUCTURAL CONCRETE (BRIDGE)". NO EXTRA PAYMENT WILL BE MADE.

MACADAM STONE WING ARMORING NOTES:

MACADAM STONE SHALL BE PLACED ALONG THE SIDE OF THE WING AND ABUTMENT FOOTING. THIS IS TYPICAL AT EACH CORNER OF THE BRIDGE UNLESS OTHERWISE NOTED IN THE PLANS. THE MACADAM STONE AT THESE LOCATIONS SHALL BE UNDERLAYED WITH ENGINEERING FABRIC AND BE IN ACCORDANCE WITH ARTICLE 4196.01, B, 3, OF THE STANDARD SPECIFICATIONS.

THE BRIDGE BERM FORESLOPE SHALL BE COMPACTED AND SHAPED AS SHOWN ON THESE PLANS, THE SITUATION PLAN AND AS DIRECTED BY THE ENGINEER. THE BERM FORESLOPE SHALL BE FIRM WHEN THE ENGINEERING FABRIC AND MACADAM STONE ARE PLACED.

THE ENGINEERING FABRIC SHALL BE IN ACCORDANCE WITH ARTICLE 4196.01, B, 3, OF THE STANDARD SPECIFICATIONS. IF THE ENGINEERING FABRIC IS LAPPED THE LAPS SHALL BE A MINIMUM OF ONE FOOT IN LENGTH, SHINGLE FASHION WITH UP SLOPE LAP PIECE ON TOP AND STAPLED FOR CONTINUITY.

THE MACADAM STONE SHALL BE IN ACCORDANCE WITH ARTICLE 4122.02, OF THE STANDARD SPECIFICATIONS FOR COARSE MATERIAL (NO CHOKE STONE IS ALLOWED).

WOOD PRESERVATIVE TREATMENT FOR THE TIMBER EDGING SHALL MEET THE REQUIREMENTS FOR GUARDRAIL POSTS, SAWED FOUR SIDES, AND BE IN ACCORDANCE WITH SECTION 4161, OF THE STANDARD SPECIFICATIONS.

THE MACADAM STONE SHALL BE DEPOSITED, SPREAD, CONSOLIDATED AND SHAPED BY MECHANICAL OR HAND METHODS THAT WILL PROVIDE UNIFORM DEPTH AND DENSITY AND PROVIDE UNIFORM SURFACE APPEARANCE.

PAYMENT FOR THE BRIDGE WING ARMORING SHALL BE INCIDENTAL TO THE BID ITEM "STRUCTURAL CONCRETE (BRIDGE)" AND SHALL INCLUDE COSTS OF ALL MATERIAL AND LABOR TO CONSTRUCT THE WING ARMORING AS SHOWN ON THESE PLANS.

REVISED 09-2014: THE AREA OF MACADAM STONE WAS EXTENDED 2'-0 IN FRONT OF THE BRIDGE WING.
REVISED 09-2020: UPDATED BRIDGE ENGINEER SIGNATURE.

09-2020
LATEST REVISION DATE

APPROVED BY BRIDGE ENGINEER

IOWA DOT Highway Division

STANDARD DESIGN - 30' ROADWAY, 3 SPAN BRIDGES
CONTINUOUS CONCRETE SLAB BRIDGES
NOVEMBER, 2006

WING ARMORING DETAILS

J30-46-06

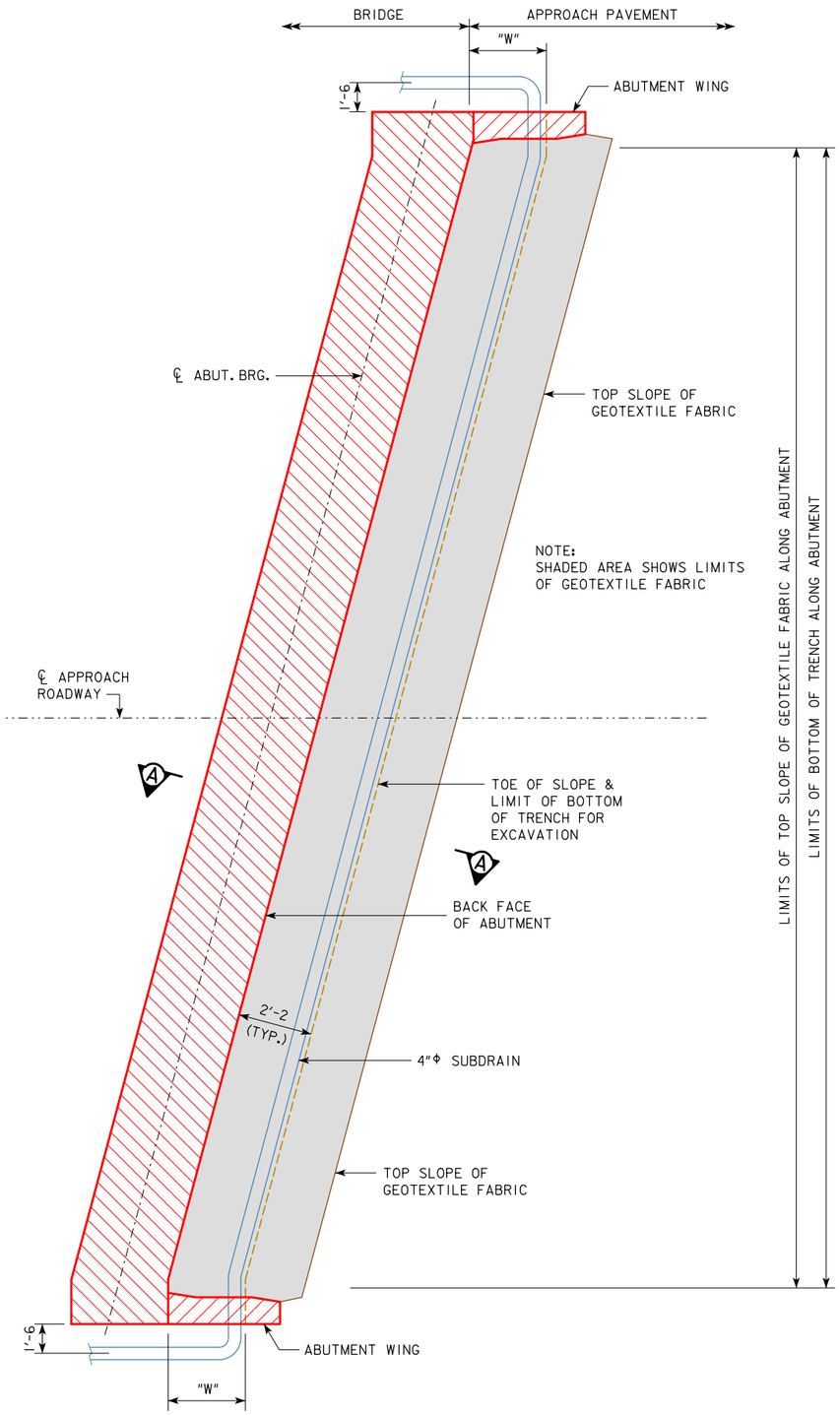

ABUTMENT PLAN WITHOUT WING EXTENSIONS

"W" DIMENSION	
SKEW	DIMENSION
15°	2'-2 7/8
30°	2'-6
45°	3'-0 3/4

ABUTMENT BACKFILL PROCESS:

THE BASE OF THE EXCAVATION SUBGRADE BEHIND THE ABUTMENT IS TO BE GRADED WITH A 4% SLOPE AWAY FROM THE ABUTMENT FOOTING AND A 2% CROSS SLOPE IN THE DIRECTION OF THE SUBDRAIN OUTLET. THIS EXCAVATION SHAPING IS TO BE DONE PRIOR TO BEGINNING INSTALLATION OF THE GEOTEXTILE AND BACKFILL MATERIAL.

AFTER THE SUBGRADE HAS BEEN SHAPED, THE GEOTEXTILE FABRIC SHALL BE INSTALLED IN ACCORDANCE WITH THE DETAILS SHOWN. THE FABRIC IS INTENDED TO BE INSTALLED IN THE BASE OF THE EXCAVATION AND EXTENDED VERTICALLY UP THE ABUTMENT BACKWALL, ABUTMENT WING WALLS, AND EXCAVATION FACE TO A HEIGHT THAT WILL BE APPROXIMATELY 1 TO 2 FOOT HIGHER THAN THE HEIGHT OF THE POROUS BACKFILL PLACEMENT AS SHOWN IN THE "BACKFILL DETAILS" ON THIS SHEET. THE STRIPS OF THE FABRIC PLACED SHALL OVERLAP APPROXIMATELY 1 FOOT AND SHALL BE PINNED IN PLACE. THE FABRIC SHALL BE ATTACHED TO THE ABUTMENT BY USING LATH FOLDED IN THE FABRIC AND SECURED TO THE CONCRETE WITH SHALLOW CONCRETE NAILS. THE FABRIC PLACED AGAINST THE EXCAVATION FACE SHALL BE PINNED.

WHEN THE FABRIC IS IN PLACE, THE SUBDRAIN SHALL BE INSTALLED DIRECTLY ON THE FABRIC AT THE TOE OF THE REAR EXCAVATION SLOPE. A SLOT WILL NEED TO BE CUT IN THE FABRIC AT THE POINT WHERE THE SUBDRAIN EXITS THE FABRIC NEAR THE END OF THE ABUTMENT WING WALL.

POROUS BACKFILL IS THEN PLACED AND LEVELED, NO COMPACTION IS REQUIRED.

THE REMAINING WORK INVOLVES BACKFILLING WITH FLOODABLE BACKFILL, SURFACE FLOODING, AND VIBRATORY COMPACTION. THE FLOODABLE BACKFILL MATERIAL SHALL BE IN ACCORDANCE WITH THE STANDARD SPECIFICATIONS. THE FLOODABLE BACKFILL SHALL BE PLACED IN INDIVIDUAL LIFTS, SURFACE FLOODED, AND COMPACTED WITH VIBRATORY COMPACTION TO ENSURE FULL CONSOLIDATION. LIMIT THE LOOSE LIFTS TO NO MORE THAN 2 FEET OF THICKNESS.

START SURFACE FLOODING FOR EACH FLOODABLE BACKFILL LIFT AT THE HIGH POINT OF THE SUBDRAIN AND PROGRESS TO THE LOW POINT WHERE THE SUBDRAIN EXITS THE FABRIC. TO ENSURE UNIFORM SURFACE FLOODING, WATER RUNNING FULL IN A 2-INCH DIAMETER HOSE SHOULD BE SPRAYED IN SUCCESSIVE 6-FOOT TO 8-FOOT INCREMENTS FOR 5 MINUTES WITHIN EACH INCREMENT.

FLOODABLE BACKFILL LIFT PLACEMENT, FLOODING, AND COMPACTION SHALL PROGRESS UNTIL THE REQUIRED FULL THICKNESS OF THE ABUTMENT BACKFILL HAS BEEN COMPLETED.

WATER REQUIRED FOR FLOODING, SUBDRAINS, POROUS BACKFILL, FLOODABLE BACKFILL, AND GEOTEXTILE FABRIC FURNISHED AT THE BRIDGE ABUTMENTS WILL NOT BE MEASURED SEPARATELY FOR PAYMENT.

THE COST OF WATER REQUIRED FOR FLOODING, SUBDRAINS, POROUS BACKFILL, FLOODABLE BACKFILL, AND GEOTEXTILE FABRIC FURNISHED AT THE BRIDGE ABUTMENTS SHALL BE INCLUDED IN THE CONTRACT UNIT PRICE BID FOR STRUCTURAL CONCRETE.

NOTE:
SEE SUBDRAIN DETAILS SHEET FOR DETAILS NOT SHOWN ON THIS SHEET WHICH ARE PERTINENT TO THIS STRUCTURE.

NOTE:

SUBDRAIN SHALL SLOPE DOWNWARD 2% FROM ℄ APPROACH ROADWAY WHEN OUTLETTING BOTH SIDES OF THE ABUTMENT.

SUBDRAIN SHALL SLOPE DOWNWARD 2% FROM HIGH END WHEN OUTLETTING AT ONE END OF THE ABUTMENT.

THE GEOTEXTILE FABRIC SHALL BE IN ACCORDANCE WITH ARTICLE 4196.01, B, 6 OF THE STANDARD SPECIFICATIONS. IF THE ENGINEERING FABRIC IS LAPPED THE LAPS SHALL BE A MINIMUM OF ONE FOOT IN LENGTH, SHINGLE FASHION WITH UP SLOPE LAP PIECE ON TOP AND STAPLED FOR CONTINUITY.

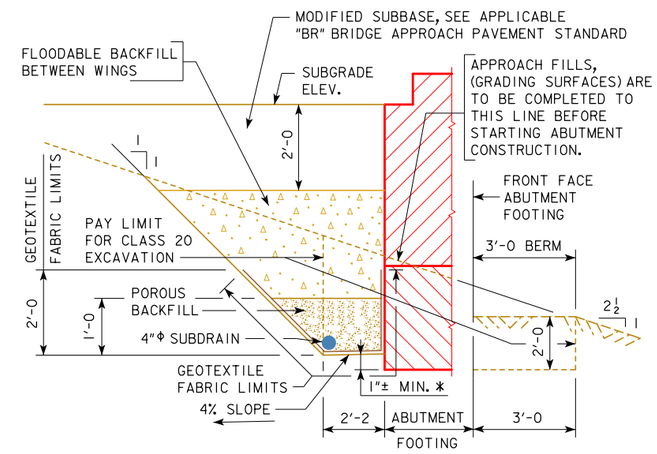

SECTION A-A

BACKFILL DETAILS

NOTE: GEOTEXTILE FABRIC WILL BE ATTACHED TO FACE OF ABUTMENT FOOTING AND WINGS.

* DIMENSION VARIES DUE TO 2% SUBDRAIN SLOPE.

09-2020
LATEST REVISION DATE

APPROVED BY BRIDGE ENGINEER

IOWA DOT Highway Division

STANDARD DESIGN - 30' ROADWAY, 3 SPAN BRIDGES

CONTINUOUS CONCRETE SLAB BRIDGES

DECEMBER, 2008

ABUTMENT BACKFILL DETAILS

FOR 15°, 30°, & 45° SKEWS

J30-48-06

REVISED 09-2014: THE TECHNICAL DATA INFORMATION TABLE WAS REMOVED AND A NOTE ADDED TO REFER TO THE STANDARDS SPECIFICATIONS FOR THIS INFORMATION.
REVISED 07-2016: CHANGED THE BRIDGE APPROACH PAVEMENT STANDARD TO "BR" (WAS "RK").
REVISED 09-2020: UPDATED BRIDGE ENGINEER SIGNATURE.

Cast in Place

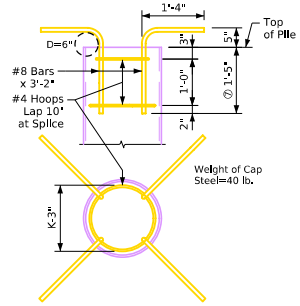

Prestressed

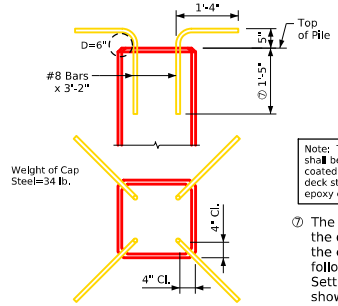

Note: The #8 bars shall be epoxy coated when the deck steel is epoxy coated.

⑦ The Contractor has the option to install the cap steel as dowels following the Dowel Setting Procedure notes shown on this sheet.

Concrete Encased Steel H Pile

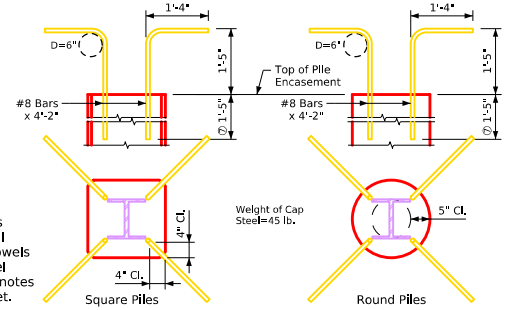

Cap Steel Details

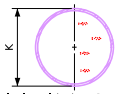

Spiral Welded or Seamless Steel Pipe ASTM A252 GR. 2 or GR. 3

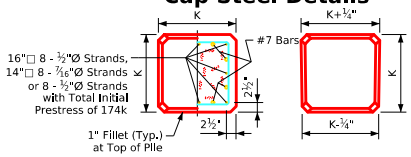

Cap Steel Details

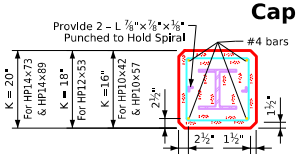

Cap Steel Details

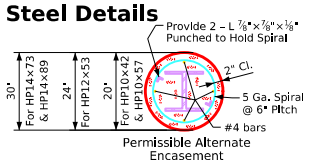

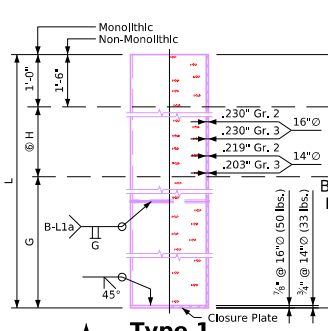

Type 1

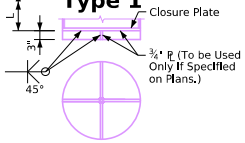

Steel Driving Points

ASTM A36

K Dimension	in	14Ø		16Ø	
G Min. Below Ground	ft	24		27	
⑥ H Max. Above Ground	ft	18		22	
Shell ASTM A-252		Gr. 2	Gr. 3	Gr. 2	Gr. 3
Concrete (L=40')	cy	1.49	1.49	1.95	1.95
Concrete 1' Change	cy	0.0372	0.0373	0.0488	0.0488
① Wt. of Shell (L=40')	lb	1325	1231	1600	1600
Wt. of Shell 1' Change	lb	32.26	29.94	38.77	38.77
f'c	ksi	4.0	4.0	4.0	4.0
⑤ Nominal Resistance Pn	kips	119	119	137	137

① Includes Weight of Closure Plate.

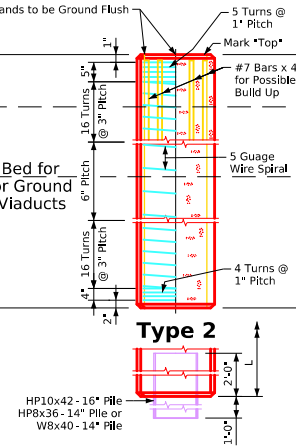

Type 2

Steel Driving Points

Strand Strength		270k	
K Dimension	in	14□	16□
G Min. Below Ground	ft	24	27
⑥ H Max. Above Ground	ft	18	22
Concrete (L=40')	cy	2.01	2.62
Concrete 1' Change	cy	0.050	0.066
② Reinforcing (L=40")	lb	232	280
Reinforcing 1' Change	lb	3.93	5.10
Max. L 1 Pt. Pick-Up	ft	57	60
Max. L 2 Pt. Pick-Up	ft	82	86
f'c	ksi	5.0	5.0
⑤ Nominal Resistance Pn	kips	127	146
③ Initial Prestress	kips	174	231

② Includes Prestressing Strands.
③ Increase 5% for Artificial Curing.

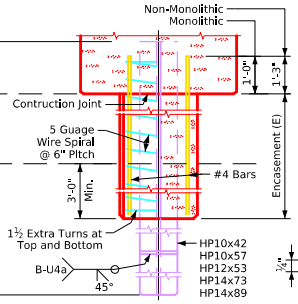

Type 3

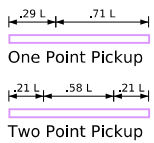

Pile Handling Diagram

B-U4a for Web and Flange Weld

⑥ The maximum H may be measured to the streambed elevation, however; H shall be measured to the scour elevation when this elevation is deeper than the streambed elevation.

Steel H Pile			HP10×42	HP10×57	HP12×53	HP14×73	HP14×89
G Min. Below Ground		ft	18	18	21	24	24
⑥ H Max. Above Ground W/ Monolithic		ft	19	19	23	28	29
⑥ H Max. Above Ground W/ Non-Monolithic		ft	15	16	20	25	26
Square	Concrete (E=18')	cy	1.12	1.10	1.41	1.74	1.72
	Concrete 1' Change	cy	0.062	0.061	0.078	0.097	0.096
	④ Reinforcing (E=18')	lb	96	96	99	103	103
	④ Reinforcing 1' Change	lb	4.98	4.98	5.13	5.28	5.28
Round	Concrete (E=18')	cy	1.40	1.38	2.02	3.17	3.15
	Concrete 1' Change	cy	0.078	0.076	0.112	0.176	0.175
	④ Reinforcing (E=18')	lb	97	97	102	110	110
	④ Reinforcing 1' Change	lb	5.02	5.02	5.26	5.62	5.62
⑤ Nominal Resistance Pn		kips	154	208	192	265	324
f'c = 4.0 ksi							

④ Includes Weight of Punched L ⅞"×⅞"×⅛"
⑤ See Bridge Design Manual 6.6.4.2 for Additional Information

General Notes:

Except as noted elsewhere, material, construction, driving and extensions or build ups when necessary shall be in accordance with Standard Specifications of the Iowa D.O.T. and current Supplemental Specifications and Special Provisions applicable.

Cap steel shall be as detailed on this sheet (D=Pin Diameter). It shall be used if pile embedment is less than 1'-6".

"Nominal resistance Pn", "G", and "H" as given in tables are recommended design values for ordinary conditions, but may be modified for special conditions on any given job.

Nominal resistance Pn and pile size required shall in all cases be as specified on the plans.

Nominal resistance Pn shown are for friction resistance except for Type 3 piling where the resistance values shown could be either friction or point resistance.

Cost of all driving points and cap steel is to be included in the price bid per linear foot for piling.

Wire spiral shall conform to ASTM A1064 Grade 70.

Cast in Place Pile Notes:

Shell thicknesses shown are minimum requirements. The method of driving steel shell piles shall be adapted to the type and thickness of shell specified. Any shells which have been improperly driven, broken or are otherwise defective shall be removed and replaced by the bridge Contractor.

All cast in place piles shall have a closure plate. Driving points shall be used if specified on the plans.

Prestressed Pile Notes:

Except as otherwise noted all exposed corners 90° or sharper shall be filleted ¾".

Driving points for prestressed piles, if called for on the plans, shall be as detailed.

Heads of prestressed piles to be finished smooth and normal to axis of pile.

Bidding Notes:

The plans shall designate the size of pile to be used. They shall also specify the type, either Type 1, Type 2, or Type 3. If the option of Type 1 or 2 is given on the plans, the Contractor shall choose the type to be used. If Type 3 is specified, Type 3 shall be used, but the Contractor may choose the shape of the encasement. It should be kept in mind that for a given size and resistance value, length may vary with the shape (square or round).

Piles shall be bid designating the size, type and length.

Type 1 piling will be bid per linear foot of pile.

Type 2 piling will be bid per linear foot of pile.

Type 3 piling will be bid per linear foot of pile and linear foot of encasement. Price bid for encasement shall be full payment for necessary excavation and for furnishing and placing all material.

Dowel Setting Procedure:

If cap steel is required for the prestressed piles, the #8 deformed bars are to be set as dowels into the piles with polymer grout in accordance with Article 2301.03, E, of the Standard Specifications or by the following procedure.

A - Drill hole approximately twice the diameter of the dowel bar and to the depth indicated.

B - Fill hole with water and allow to stand long enough to thoroughly saturate the surrounding concrete (about four hours).

C - Blow out all free water and fill hole 2/3 full of mortar.

D - Insert dowel by driving, if necessary, and manipulate or tap with a hammer to consolidate mortar and secure complete embedment.

E - Add more mortar, if necessary, to fill hole.

F - Mortar shall consist of equal parts portland cement and sand with just enough water to make a workable mix.

Approved By: Bridge Engineer

Latest Revision 06-2025
Date:

LRFD Trestle Pile Bents - P10L

Revised 03-2022: Updated Spiral Requirements To ASTM A1054 Grade 70 (was ASTM A82).
Revised 06-2025: Corrected Typos and Added Note ⑥. This note was missing when the sheet was updated and re-issued on 11-2023 (the note was on the previous version of this sheet).
MiscellaneousBridges.dgn - P10L - This Sheet Re-Issued 11-2023. Sheet Format Update.

FILE NO.	ENGLISH	DESIGN TEAM	LRFD Designed Trestle Pile Bents	Standard Sheet P10L	COUNTY	PROJECT NUMBER	SHEET NUMBER

11:23:39 AM 6/13/2025 bkloss pw:\\NTPwInt1.dot.int.lan:PWMain\Documents\Highway\Bridge\Standards\Bridges\MiscellaneousBridges.dgn